OMRON

Robotic Automation

Industrial Robots Datasheets

The Omron's 5 benefits

The new Omron Robotic Automation enhances the most demanding manufacturing lines providing **5 main benefits**

Performance

Overall through-put is guaranteed by the synchronization of our Sysmac machine control with the new vision guided robots

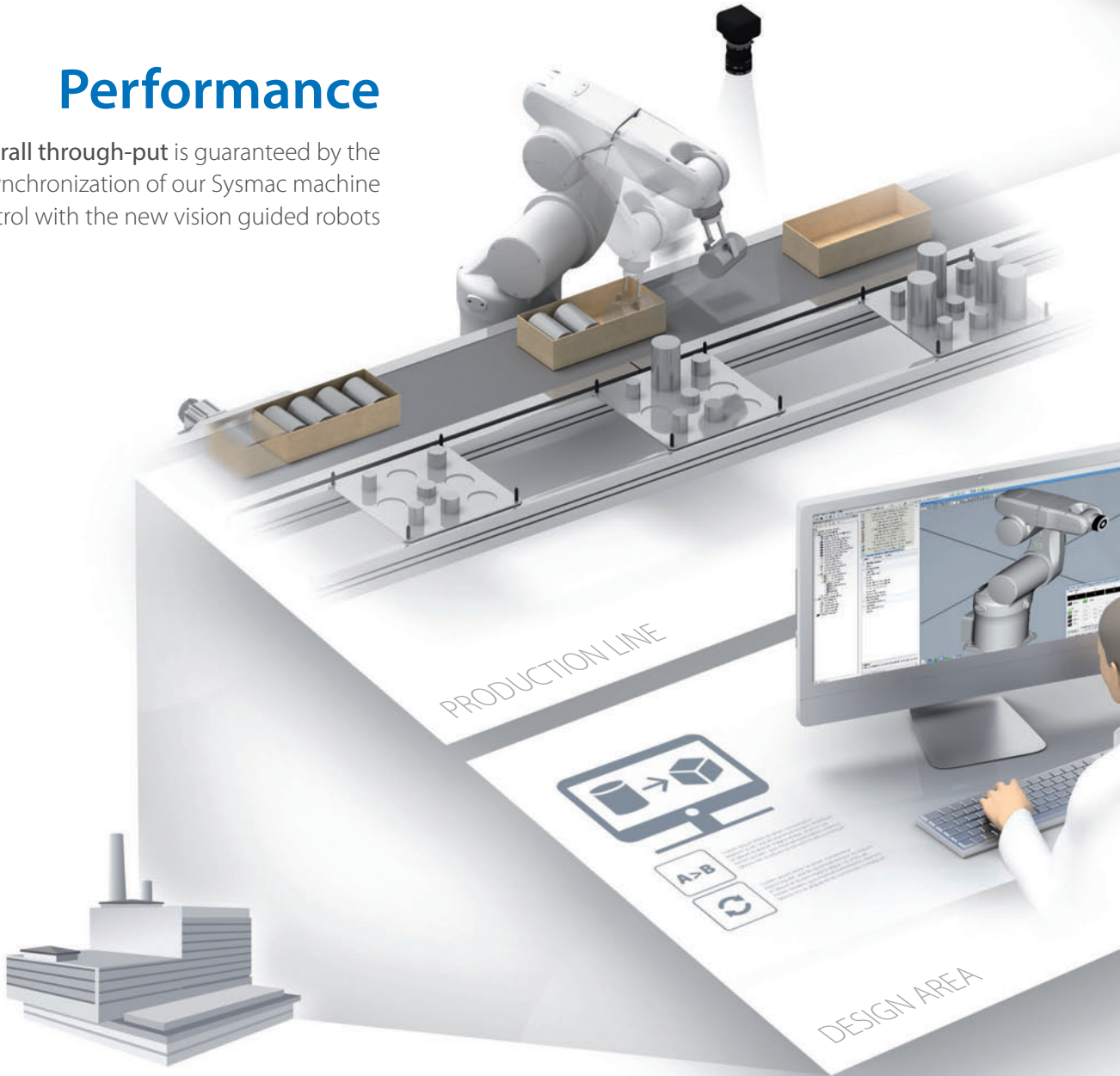

Factory

Quick Delivery

5 huge automated warehouses to provide parts in short time.

Simple

Shortening the startup and maintenance time by the integrated software environment that controls the line.

Efficient

All the production data coming from robots, controllers, sensors are collected, shared and managed to **optimize the productivity.**

Flexible

Software assisted system generates automatically the new programming code.

Industrial robots - 49 models in 3 categories - provide unique solutions

Manufacturing site innovation by using robots for various applications

Omron offers robotic automation solutions for applications from cutting-edge production facilities to manual operation processes by using our wide variety of control devices and integrating robotics into automation.

Parallel robots

The Hornet and Quattro are parallel robots ideal for use in the food and beverage, pharmaceutical, and healthcare industries. The Quattro that is a four-axis parallel robot with a high payload capacity achieves high speed and high precision.

Feature

- The servo amplifier and controller are fully embedded into the robot, reducing wiring and saving valuable floor space

Hornet 565
Quattro 650/800

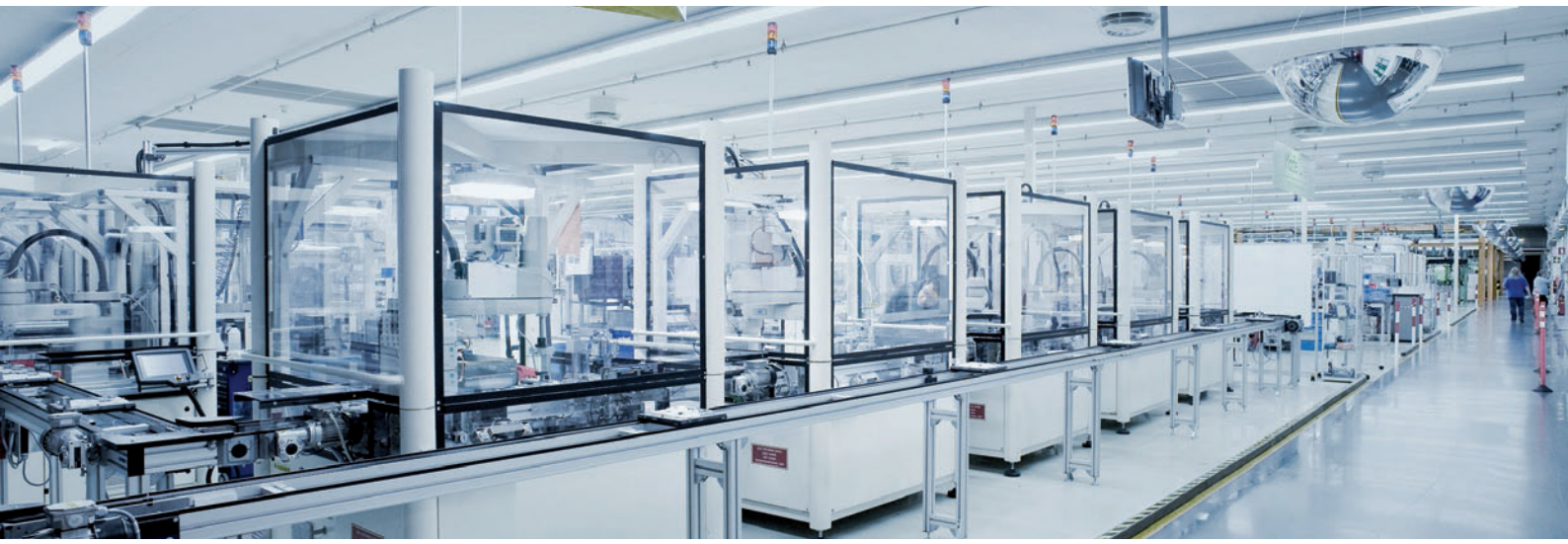

Cobra 350
eCobra 600/800
eCobra 800 Inverted

Viper 650/850

SCARA robots

High-performance four-axis SCARA robots are ideal for mechanical assembly, material handling, packaging, machine tending, and screw driving. Floor or overhead mounting models are available.

Articulated robots

Six-axis articulated robots are ideal for mechanical assembly, material handling, packaging, and palletizing.

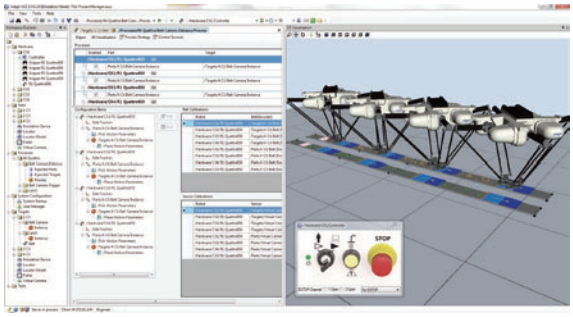

Automation Control Environment (ACE)

All-in-one software features a simulation function, providing an effective way to deploy applications. ACE provides a host of innovative features that allow you to increase productivity while streamlining configuration setup.

Robot Lineup

Industry			Recommended process and application	Parallel robot	
Food & Beverage	Digital	Automobile		Hornet 565	Quattro 650/800
			Primary packing	●	●
			Secondary packing	●	●
			Aligning, packaging	●	●
			Shipping and receiving (palletizing)		
			Tightening unts		
			General assembling		
			Deburring and polishing		
			Sealing		
			Measuring, inspection, testing		●
			Resin molding		
			Press operation handling		
			Machine loading		
			Sealing		
			Measuring, inspection, testing		
			Material handling		
			Mounting	Inverted	
			Payload capacity	3 kg (8 kg ✻1)	650: 6 kg (15 kg ✻2) 800: 4 kg (10 kg ✻2)
			Radius	565 mm	650 to 800 mm
			Reach	---	---
			Position repeatability	±0.10 mm	±0.10 mm

✻1. without rotation axis

✻2. Quattro using P30

SCARA robot			Articulated robot
Cobra 350	eCobra 600/800	eCobra 800 Inverted	Viper 650/850
●	●	●	
●	●	●	●
	●	●	●
●	●	●	●
●	●	●	●
●	●	●	●
●	●	●	●
●	●	●	●
			●
	●	●	●
	●	●	●
	●	●	●
	●	●	●
			●
Table / Floor		Inverted	Table/Floor/Inverted
5 kg	5.5 kg	5.5 kg	5 kg
---	---	---	---
350 mm	600 to 800 mm	800 mm	653 to 855 mm
±0.015 mm	±0.017 mm	±0.017 mm	±0.02 to 0.03 mm

Sysmac is a trademark or registered trademark of OMRON Corporation in Japan and other countries for OMRON factory automation products.
Intel is trademarks of Intel Corporation in the U.S. and/or other countries.
Windows is either registered trademarks or trademarks of Microsoft Corporation in the United Status and/or other countries.
Other company names and product names in this document are the trademarks or registered trademarks of their respective companies.
The product photographs and figures that are used in this catalog may vary somewhat from the actual products.
Microsoft product screen shot(s) reprinted with permission from Microsoft Corporation.

Hornet 565

Parallel robot ideal for use in the food and beverage, pharmaceutical, and healthcare industries

- Ethernet capability to control the robot through the familiar programming language (IEC 61131-3) of Machine Automation Controller NJ/NX Series
- The amplifier and controller built into the robot reduces the number of cables
- Tracks up to a conveyor speed of 1.4 m/s
- Designed with a high payload to support multi-hand (multi-picking)
- Supports fast Pick & Place on a fast conveyor
- Helps reduce mounting cost and robot vibration
- Maximum working diameter 1,130 mm
- Working height 425 mm
- Maximum payload 8 kg
- Weight 52 kg
- Protection IP65 ✻2

Specifications

Product name		Hornet	
	Size	565	
	Type	3 axes	4 axes
Model		1720□-45600	1720□-45604
Number of axes		3	4
Mounting		inverted	
Working volume	X,Y axis (stroke)	1130 mm	
	Z axis (stroke)	425 mm	
	theta axis (rotation angle)	-	±360°
Maximum Payload		8 kg	3 kg
Repeatability		±0.10 mm	
Cycle times, sustained (at 20°C ambient)	Payload 0.1 kg	0.32 s ✻1	0.35 s ✻1
	Payload 1.0 kg	0.34 s ✻1	0.37 s ✻1
	Payload 3.0 kg	0.38 s ✻1	0.42 s ✻1
Power Requirements		24 VDC: 6 A 200 to 240 VAC: 10 A, single-phase	
Protection	Base	IP65 ✻2	
	Platform	IP67	
Environment Requirements	Ambient Temperature	1 to 40°C	
	Humidity Range	5 to 90% (non-condensing)	
Weight		52 kg	
Basic configuration	Controller	eAIB	
	On-board I/O (Input/Output)	12/8	
	Conveyor tracking input	2	
	RS-232C serial communications port	1	
	Programming environment	ACE, PackXpert, PLC	
	ACE Sight	Yes	
	ePLC Connect	Yes	
	ePLC I/O	Yes	
Connectable controller ✻3		SmartController EX, NJ/NX Series ✻4	

✻1. Adept cycle, in mm (25/305/25)
✻2. IP67: arms and platform, IP65:underside of robot, IP20: topside of robot, IP65:topside of robot (with option cover)
✻3. Choose a controller to suit your application.
✻4. The robot version 2.3.C is required to connect with the NX/NJ Series.

Dimensions

(Unit: mm)

Hornet 565

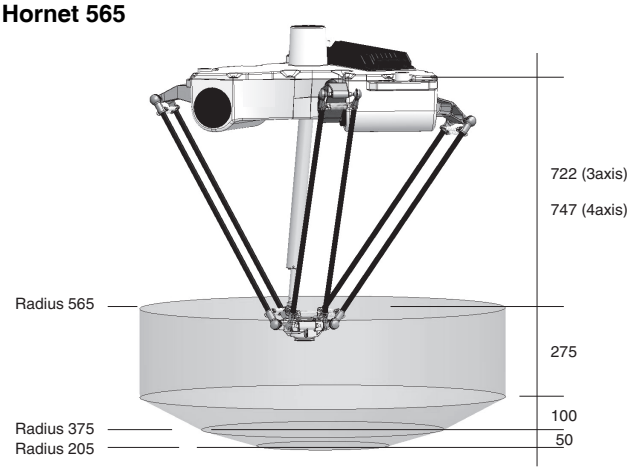

Flange

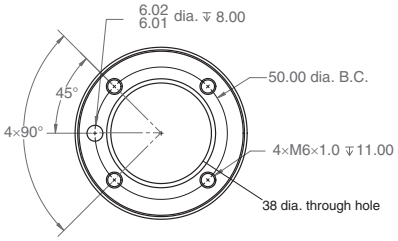

Footprint

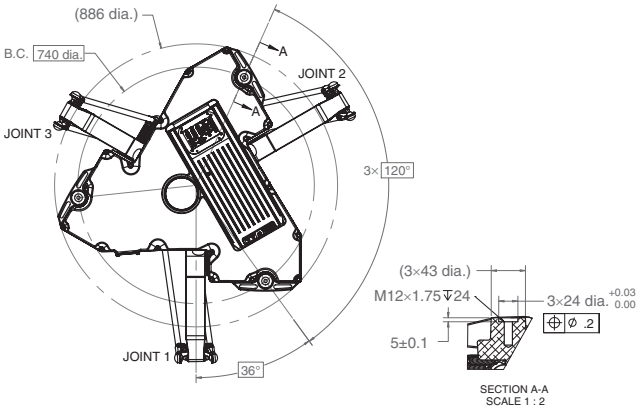

Front panel

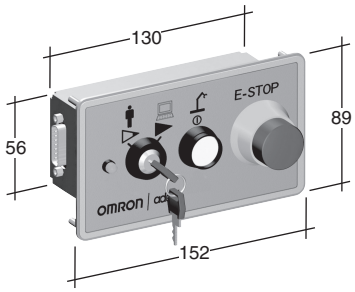

Robot Parts Code and Bundled Accessories

Type	Hornet	Hornet Add-On
Hornet 565 3Axis	17201-45600	17203-45600
Hornet 565 4Axis	17201-45604	17203-45604
Overview	Robot + eAIB with fully integrated controller	Robot + eAIB required connection cables
Purpose	Typical for use in single robot system	Typically added to systems with an existing SmartController EX to create multi-robot systems
Bundled Accessories	• XSYS cable with jumpers, 2m/6ft (13323-000) • Front panel kit (90356-10358)	• XSYS cable with jumpers, 2m/6ft (13323-000) • XSYS cable, 5m/15 ft (11585-000) • DB9 splitter (00411-000) • 1394 latch cable, 5m/15 ft, 13632-045) • eV+ license to connect to controller (14529-103)

Note: OMRON also provides other types of model. Ask your OMRON sales representative for details.

Quattro 650H/HS

Four-axis parallel robot achieves high speed and high precision

- Ethernet capability to control the robot through the familiar programming language (IEC 61131-3) of Machine Automation Controller NJ/NX Series
- Four-axis arm evenly distributes the load on the robot
- Fast and high-precision conveyance and assembly
- Designed with a high payload to support multi-hand (multi-picking)
- Supports fast Pick & Place on a fast conveyor
- Meets the sanitary standards of the United States Department of Agriculture for prevention of product contamination
- Maximum working diameter 1,300 mm
- Working height 500 mm
- Maximum payload 15 kg
- Weight 117 kg
- Protection IP66 (HS type)

Specifications

Product name		Quattro	
	Size	650	
	Type	H	HS
Model		1721□-2600□	1721□-2601□
Number of axes		4	4
Mounting		inverted	
Working volume	X,Y axis (stroke)	1300 mm	
	Z axis (stroke)	500 mm	
	theta axis (rotation angle)	0° (fixed) (P30)	
		±46.25° (P31)	
		±92.5° (P32)	
		±185° (P34)	
Maximum Payload		6 kg (P30: 15kg)	
Repeatability		±0.10mm	
Cycle times, sustained (at 20°C ambient)	Payload 0.1 kg	0.30s ✻1, 0.46 s ✻2	
	Payload 1.0 kg	0.36s ✻1, 0.47 s ✻2	
	Payload 2.0 kg	0.37s ✻1, 0.52 s ✻2	
	Payload 4.0 kg	0.41s ✻1, 0.58 s ✻2	
	Payload 6.0 kg	0.43s ✻1, 0.61 s ✻2	
Power Requirements		24 VDC: 11 A (eAIB, SmartController) 200 to 240 VAC: 10 A, single-phase	
Protection	Base	IP65 (with optional cable sealing kit)	IP66
	Tooling	IP67	IP67
Environment Requirements	Ambient Temperature	1 to 40°C	
	Humidity Range	5 to 90% (non-condensing)	
Weight		117 kg	
USDA-Accepted for meat and poultry processing		---	Yes
Basic configuration	Controller	SmartController EX	
	On-board I/O (Input/Output)	12/8	
	Conveyor tracking input	4	
	RS-232C serial communications port	1	
	Programming environment	ACE, PackXpert, PLC	
	ACE Sight	Yes	
	ePLC Connect	Yes	
	ePLC I/O	Yes	
Connectable controller ✻3		SmartController EX, NJ/NX Series ✻4	

✻1. Adept cycle, in mm (25/305/25)
✻2. Extended cycle, in mm (25/700/25)
✻3. Choose a controller to suit your application.
✻4. The robot version 2.3.C is required to connect with the NX/NJ Series.

Dimensions

(Unit: mm)

Quattro 650H/HS

Note: The figure shows the HS type.

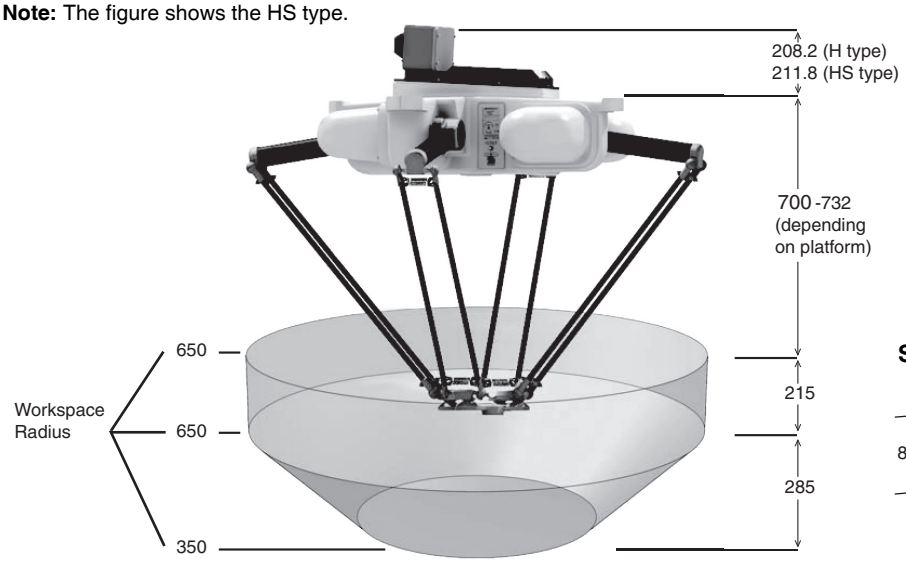

Front panel

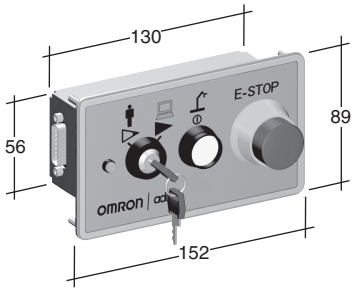

SmartController EX

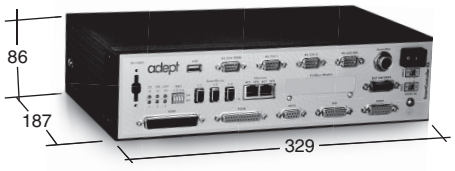

Four choices of platform offer different ranges of rotation.

Appearance				
Type	P30	P31	P32	P34
Rotation angle	No rotation	±46.25°	± 92.5°	±185°
Maximum Payload	H: 15 kg, HS: 12 kg	H: 6 kg, HS: 3 kg	H: 6 kg, HS: 3 kg	H: 6 kg, HS: 3 kg

Note: The platform appearances of the H type are shown above. The platform of the HS type is made of stainless steel.

Robot Parts Code and Bundled Accessories

Type	Quattro with EX Controller	Quattro Add-On
Quattro 650H P30	17214-26000	17213-26000
Quattro 650H P31	17214-26001	17213-26001
Quattro 650H P32	17214-26002	17213-26002
Quattro 650H P34	17214-26004	17213-26004
Quattro 650HS P30	17214-26010	17213-26010
Quattro 650HS P31	17214-26011	17213-26011
Quattro 650HS P32	17214-26012	17213-26012
Quattro 650HS P34	17214-26014	17213-26014
Overview	Robot + eAIB+ SmartController EX + required connection cables	Robot + eAIB + required connection cables
Purpose	Typical for use in single robot system and multi-robot systems.	Typically added to systems with an existing SmartController EX to create multi-robot systems
Bundled Accessories	• XSYS cable with jumpers, 2m/6ft (13323-000) • SmartController EX (09200-000) • XSYS cable, 5m/15 ft (11585-000) • 1394 latch cable, 5m/15 ft, 13632-045) • Front panel kit (90356-10358) • eV+ license to connect to controller (14529-103)	• XSYS cable with jumpers, 2m/6ft (13323-000) • XSYS cable, 5m/15 ft (11585-000) • DB9 splitter (00411-000) • 1394 latch cable, 5m/15 ft, 13632-045) • eV+ license to connect to controller (14529-103)

Note: OMRON also provides other types of model. Ask your OMRON sales representative for details.

Quattro 800H

Four-axis parallel robot achieves high speed and high precision

- Ethernet capability to control the robot through the familiar programming language (IEC 61131-3) of Machine Automation Controller NJ/NX Series
- Four-axis arm evenly distributes the load on the robot
- Fast and high-precision conveyance and assembly
- Designed with a high payload to support multi-hand (multi-picking)
- Supports fast Pick & Place on a fast conveyor
- Maximum working diameter 1,600 mm
- Working height 500 mm
- Maximum payload 10 kg
- Weight 117 kg
- Protection IP65 (with optional cable sealing kit)

Specifications

Product name		Quattro
	Size	800
	Type	H
Model		1721□-2630□
Number of axes		4
Mounting		inverted
Working volume	X,Y axis (stroke)	1600 mm
	Z axis (stroke)	500 mm
	theta axis (rotation angle)	0° (fixed) (P30)
		±46.25° (P31)
		±92.5° (P32)
		±185° (P34)
Maximum Payload		4 kg (P30:10 kg)
Repeatability		±0.10 mm
Cycle times, sustained (at 20°C ambient)	Payload 0.1 kg	0.33 s ✻1, 0.48 s ✻2
	Payload 1.0 kg	0.38 s ✻1, 0.50 s ✻2
	Payload 2.0 kg	0.40 s ✻1, 0.55 s ✻2
	Payload 4.0 kg	0.45 s ✻1, 0.62 s ✻2
Power Requirements		24 VDC: 11 A (eAIB, SmartController) 200 to 240 VAC: 10 A, single-phase
Protection	Base	IP65 (with optional cable sealing kit)
	Tooling	IP67
Environment Requirements	Ambient Temperature	1 to 40°C
	Humidity Range	5 to 90% (non-condensing)
Weight		117 kg
Basic configuration	Controller	SmartController EX
	On-board I/O (Input/Output)	12/8
	Conveyor tracking input	4
	RS-232C serial communications port	3
	Programming environment	ACE, PackXpert, PLC
	ACE Sight	Yes
	ePLC Connect	Yes
	ePLC I/O	Yes
Connectable controller ✻3		SmartController EX, NJ/NX Series ✻4

✻1. Adept cycle, in mm (25/305/25)
✻2. Extended cycle, in mm (25/700/25)
✻3. Choose a controller to suit your application.
✻4. The robot version 2.3.C is required to connect with the NX/NJ Series.

Dimensions

(Unit: mm)

Quattro 800H

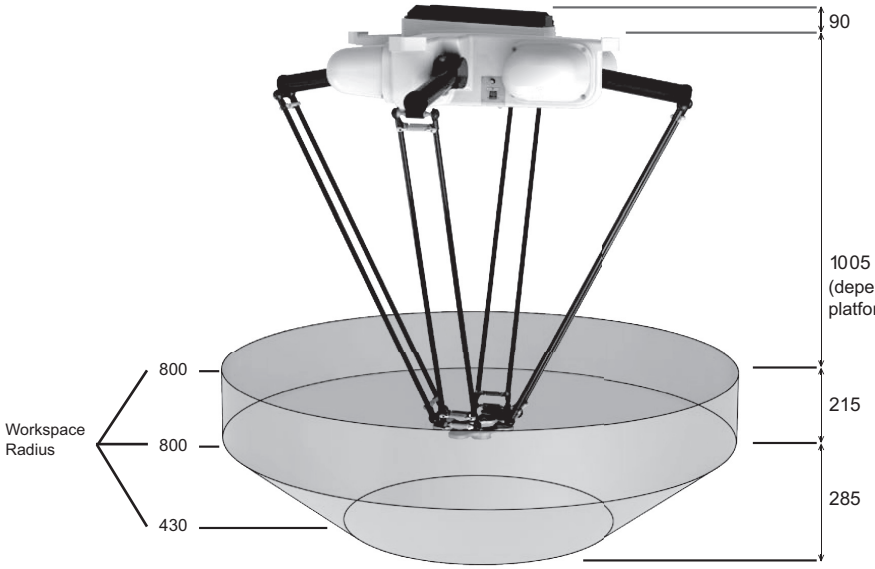

Front panel

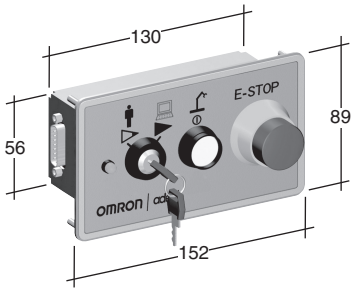

SmartController EX

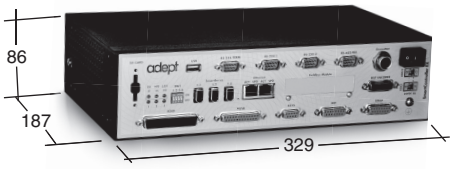

Four choices of platform offer different ranges of rotation.

Appearance				
Type	P30	P31	P32	P34
Rotation angle	No rotation	±46.25°	± 92.5°	±185°
Maximum Payload	10 kg	4 kg	4 kg	4 kg

Robot Parts Code and Bundled Accessories

Type	Quattro with EX Controller	Quattro Add-On
Quattro 800H P30	17214-26300	17213-26300
Quattro 800H P31	17214-26301	17213-26301
Quattro 800H P32	17214-26302	17213-26302
Quattro 800H P34	17214-26304	17213-26304
Overview	Robot + eAIB+ SmartController EX + required connection cables	Robot + eAIB + required connection cables
Purpose	Typical for use in single robot system and multi-robot systems.	Typically added to systems with an existing SmartController EX to create multi-robot systems
Bundled Accessories	• XSYS cable with jumpers, 2m/6ft (13323-000) • SmartController EX (09200-000) • XSYS cable, 5m/15 ft (11585-000) • 1394 latch cable, 5m/15 ft, 13632-045) • Front panel kit (90356-10358) • eV+ license to connect to controller (14529-103)	• XSYS cable with jumpers, 2m/6ft (13323-000) • XSYS cable, 5m/15 ft (11585-000) • DB9 splitter (00411-000) • 1394 latch cable, 5m/15 ft, 13632-045) • eV+ license to connect to controller (14529-103)

Note: OMRON also provides other types of model. Ask your OMRON sales representative for details.

Cobra 350

Small SCARA robot for precision machining, assembly, and material handling

- Ethernet capability to control the robot through the familiar programming language (IEC 61131-3) of Machine Automation Controller NJ/NX Series
- High repeatability suitable for precision assembly
- High payload for screw-driving tools
- The separate amplifier with a built-in controller minimizes the robot footprint
- Reach 350 mm
- Maximum payload 5 kg
- Weight 20 kg
- Protection IP20
- Cleanroom class 10 option

Specifications

Product name		Cobra
	Size	350
Model		1720□-13000
Number of axes		4
Mounting		table/floor
Reach		350 mm
Maximum Payload		5 kg
Repeatability	XY	±0.015 mm
	Z	±0.01 mm
	Theta	±0.005°
Joint Range	Joint 1	±155°
	Joint 2	±145°
	Joint 3	200 mm
	Joint 4	±360°
Joint Speeds	Joint 1	720°/s
	Joint 2	720°/s
	Joint 3	2000 mm/s
	Joint 4	2400°/s
Power Requirements		24 VDC: 6 A 200 to 240 VAC: 10 A, single-phase
Protection		IP20
Environment Requirements	Ambient Temperature	5 to 40°C
	Humidity Range	5 to 90% (non-condensing)
Weight		20 kg
Basic configuration	Controller	eAIB
	On-board I/O (Input/ Output)	12/8
	Conveyor tracking input	2
	RS-232C serial communications port	1
	Programming environment	ACE, PackXpert, PLC
	ACE Sight	Yes
	ePLC Connect	Yes
	ePLC I/O	Yes
Connectable controller ✻1		eMotionBlox-40R, SmartController EX, NJ/NX Series ✻2

✻1. Choose a controller to suit your application.
✻2. The robot version 2.3.C is required to connect with the NX/NJ Series.

Dimensions

(Unit: mm)

Cobra 350

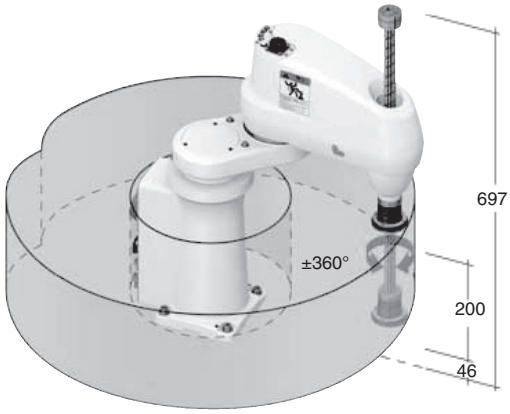

eMotion Blox-40R

Front panel

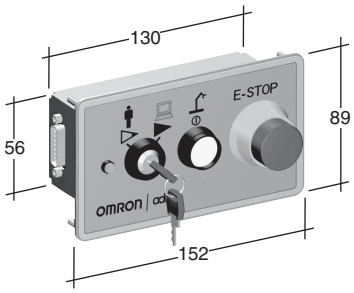

Flange

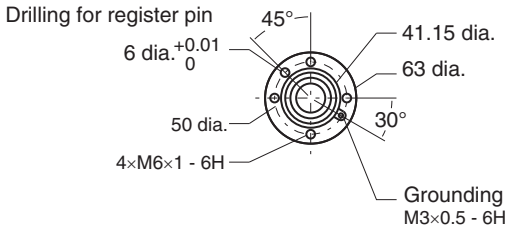

Footprint

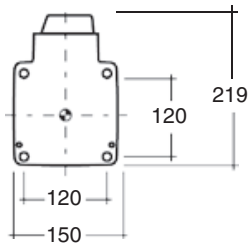

Robot Parts Code and Bundled Accessories

Type	Cobra 350	Cobra 350 Add-On
Cobra 350	17201-13000	17203-13000
Overview	Robot + eMotionBlox amplifier with fully integrated controls	Robot + eMotionBlox + required connection cables
Purpose	Typical for use in single robot system	Typically added to systems with an existing SmartController EX to create multi-robot systems
Bundled Accessories	• XSYS cable with jumpers, 2m/6ft (13323-000) • Front panel kit (90356-10358)	• XSYS cable with jumpers, 2m/6ft (13323-000) • XSYS cable, 5m/15 ft (11585-000) • DB9 splitter (00411-000) • 1394 latch cable, 5m/15 ft, 13632-045) • eV+ license to connect to controller (14529-103)

Note: OMRON also provides other types of model. Ask your OMRON sales representative for details.

eCobra 600 Lite/Standard/Pro

Mid-size SCARA robot for precision machining, assembly, and material handling

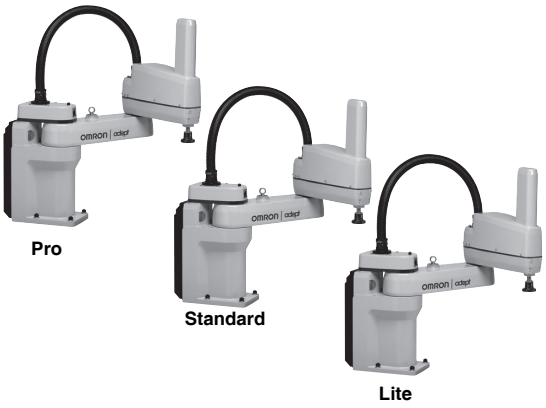

- Ethernet capability to control the robot through the familiar programming language (IEC 61131-3) of Machine Automation Controller NJ/NX Series
- High repeatability suitable for material handling and precision assembly
- High payload for screw-driving tools
- The amplifier and controller built into the robot reduces the number of cables
- Choose the right robot for you application from three different types
- Reach 600 mm
- Maximum payload 5.5 kg
- Weight 41 kg
- Protection IP20
- Cleanroom class 10 option

Specifications

Product name		eCobra		
	Size	600		
	Type	600 Lite	600 Standard	600 Pro
Model		17010-16000	1711□-16000	1721□-16000
Number of axes		4	4	4
Mounting		table/floor		
Reach		600 mm		
Maximum Payload		5.5 kg		
Repeatability	XY	±0.017 mm		
	Z	±0.003 mm		
	Theta	±0.019°		
Joint Range	Joint 1	±105°		
	Joint 2	±157.5°		
	Joint 3	210 mm		
	Joint 4	±360°		
Inetia Moment (Max.)	Joint 4	450 kg-cm^2		
Joint Speeds	Joint 1	386°/s		
	Joint 2	720°/s		
	Joint 3	1100mm/s		
	Joint 4	1200°/s		
Cycle times (Payload 2.0 kg)	Burst	0.66 s ✻1	0.55 s ✻1	0.39 s ✻1
	Sustained	0.66 s ✻1	0.55 s ✻1	0.45 s ✻1
Power Requirements		24 VDC: 6 A 200 to 240 VAC: 10 A, single-phase		
Protection		IP20		
Environment Requirements	Ambient Temperature	5 to 40°C		
	Humidity Range	5 to 90% (non-condensing)		
Weight		41 kg		
Basic configuration	Controller	eAIB		
	On-board I/O (Input/Output)	12/8, 4 Solenoid Output		
	Conveyor tracking input	No		2
	RS-232C serial communications port	No	1	
	Programming environment	ACE	ACE, PackXpert, PLC	
	ACE Sight	No ✻2	Yes	
	ePLC Connect	No	Yes	
	ePLC I/O	No	Yes	
Connectable controller ✻3		No	SmartController EX, NJ/NX Series ✻4	

✻1. Adept cycle, in mm 25/305/25 (seconds, at 20°C ambient)
✻2. The SmartVision MX cannot be used with the Lite type.
✻3. Choose a controller to suit your application.
✻4. The robot version 2.3.C is required to connect with the NX/NJ Series.

Dimensions

(Unit: mm)

eCobra 600

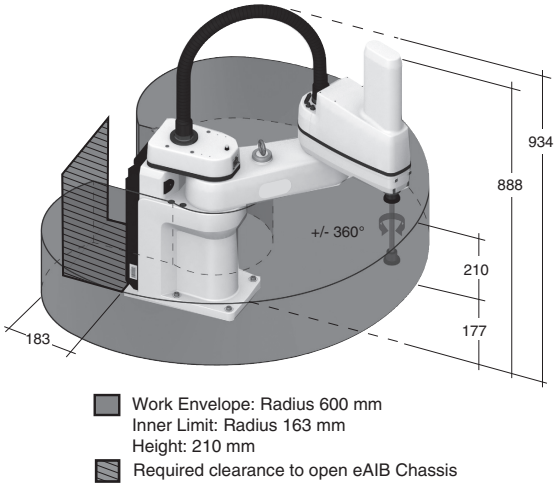

Work Envelope: Radius 600 mm
Inner Limit: Radius 163 mm
Height: 210 mm
Required clearance to open eAIB Chassis

Flange

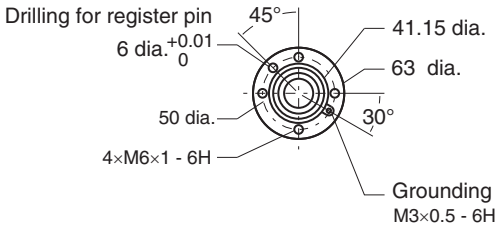

Footprint

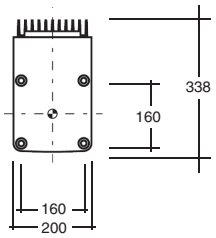

Front panel

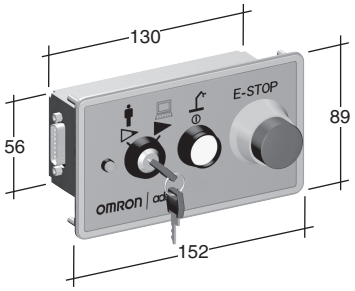

Robot Parts Code and Bundled Accessories

Type	eCobra	eCobra Add-On
eCobra 600 Lite	17010-16000	---
eCobra 600 Standard	17111-16000	17113-16000
eCobra 600 Pro	17211-16000	17213-16000
Overview	Robot + eAIB with fully integrated controls	Robot + eAIB with required connection cables
Purpose	Typical for use in single robot system	Typically added to systems with an existing SmartController EX to create multi-robot systems
Bundled Accessories	• XSYS cable with jumpers, 2m/6ft (13323-000) • Front panel kit (90356-10358)	• XSYS cable with jumpers, 2m/6ft (13323-000) • XSYS cable, 5m/15 ft (11585-000) • DB9 splitter (00411-000) • 1394 latch cable, 5m/15 ft, 13632-045) • eV+ license to connect to controller (14529-103)

Note: OMRON also provides other types of model. Ask your OMRON sales representative for details.

eCobra 800 Lite/Standard/Pro

Large SCARA robot for precision machining, assembly, and material handling

- Ethernet capability to control the robot through the familiar programming language (IEC 61131-3) of Machine Automation Controller NJ/NX Series
- Reach is extended to 800 mm without compromising repeatability
- High payload for screw-driving tools
- The amplifier and controller built into the robot reduces the number of cables
- Choose the right robot for you application from three different types
- Reach 800 mm
- Maximum payload 5.5 kg
- Weight 43 kg
- Protection IP20 (IP65 option)
- Cleanroom class 10 option

Specifications

Product name		eCobra		
	Size	800		
	Type	800 Lite	800 Standard	800 Pro
Model		17010-18000	1711□-18000	1721□-18000
Number of axes		4	4	4
Mounting		table/floor		
Reach		800 mm		
Maximum Payload		5.5 kg		
Repeatability	XY	±0.017 mm		
	Z	±0.003 mm		
	Theta	±0.019°		
Joint Range	Joint 1	±105°		
	Joint 2	±157.5°		
	Joint 3	210 mm		
	Joint 4	±360°		
Inetia Moment (Max.)	Joint 4	450 kg-cm^2		
Joint Speeds	Joint 1	386°/s		
	Joint 2	720°/s		
	Joint 3	1100 mm/s		
	Joint 4	1200°/s		
Cycle times (Payload 2.0 kg)	Burst	0.73 s ✻1	0.62 s ✻1	0.44 s ✻1
	Sustained	0.73 s ✻1	0.62 s ✻1	0.54 s ✻1
Power Requirements		24 VDC: 6 A 200 to 240 VAC: 10 A, single-phase		
Protection		IP20 (IP65 option)		
Environment Requirements	Ambient Temperature	5 to 40°C		
	Humidity Range	5 to 90% (non-condensing)		
Weight		43 kg		
Basic configuration	Controller	eAIB		
	On-board I/O (Input/Output)	12/8, 4 Solenoid Output		
	Conveyor tracking input	No		2
	RS-232C serial communications port	No	1	
	Programming environment	ACE	ACE, PackXpert, PLC	
	ACE Sight	No ✻2	Yes	
	ePLC Connect	No	Yes	
	ePLC I/O	No	Yes	
Connectable controller ✻3		No	SmartController EX, NJ/NX Series ✻4	

✻1. Adept cycle, in mm 25/305/25 (seconds, at 20°C ambient)
✻2. The SmartVision MX cannot be used with the Lite type.
✻3. Choose a controller to suit your application.
✻4. The robot version 2.3.C is required to connect with the NX/NJ Series.

Dimensions

(Unit: mm)

eCobra 800

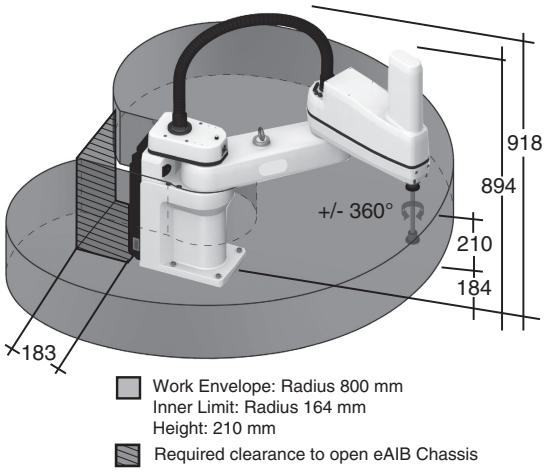

Flange

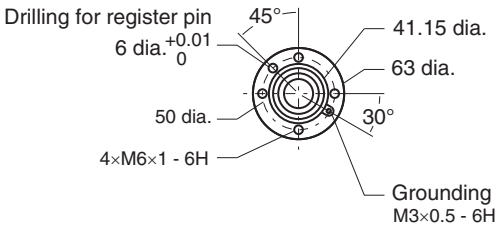

Footprint

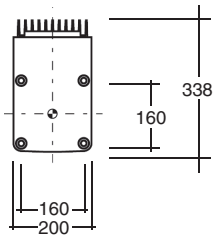

Front panel

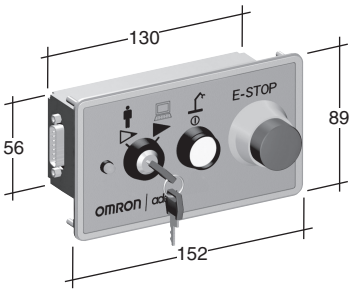

Robot Parts Code and Bundled Accessories

Type	eCobra	eCobra Add-On
eCobra 800 Lite	17010-18000	---
eCobra 800 Standard	17111-18000	17113-18000
eCobra 800 Pro	17211-18000	17213-18000
Overview	Robot + eAIB with fully integrated controls	Robot + eAIB with required connection cables
Purpose	Typical for use in single robot system	Typically added to systems with an existing SmartController EX to create multi-robot systems
Bundled Accessories	• XSYS cable with jumpers, 2m/6ft (13323-000) • Front panel kit (90356-10358)	• XSYS cable with jumpers, 2m/6ft (13323-000) • XSYS cable, 5m/15 ft (11585-000) • DB9 splitter (00411-000) • 1394 latch cable, 5m/15 ft, 13632-045) • eV+ license to connect to controller (14529-103)

Note: OMRON also provides other types of model. Ask your OMRON sales representative for details.

eCobra 800 Inverted Lite/Standard/Pro

Overhead-mount large SCARA robot for precision machining, assembly, and material handling

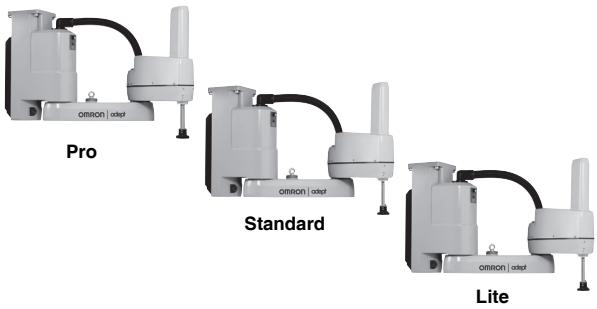

- Ethernet capability to control the robot through the familiar programming language (IEC 61131-3) of Machine Automation Controller NJ/NX Series
- Overhead-mounting configuration for efficient use of space
- High payload for screw-driving tools
- The amplifier and controller built into the robot reduces the number of cables
- Choose the right robot for you application from three different types
- Reach 800 mm
- Maximum payload 5.5 kg
- Weight 51 kg
- Protection IP20 (IP65 option)
- Cleanroom class 10 option

Specifications

Product name		eCobra Inverted		
	Size	800		
	Type	800 Lite	800 Standard	800 Pro
Model		17010-18400	1711□-18400	1721□-18400
Number of axes		4	4	4
Mounting		inverted		
Reach		800 mm		
Maximum Payload		5.5 kg		
Repeatability	XY	±0.017 mm		
	Z	±0.003 mm		
	Theta	±0.019°		
Joint Range	Joint 1	±23.5°		
	Joint 2	±156.5°		
	Joint 3	210 mm		
	Joint 4	±360°		
Inetia Moment (Max.)	Joint 4	450 kg-cm^2		
Joint Speeds	Joint 1	386°/s		
	Joint 2	720°/s		
	Joint 3	1100 mm/s		
	Joint 4	1200°/s		
Power Requirements		24 VDC: 6 A 230 VAC: 10 A		
Protection		IP20 (IP65 option)		
Environment Requirements	Ambient Temperature	5 to 40°C		
	Humidity Range	5 to 90% (non-condensing)		
Weight		51 kg		
Basic configuration	Controller	eAIB		
	On-board I/O (Input/Output)	12/8, 4 Solenoid Output		
	Conveyor tracking input	No		2
	RS-232C serial communications port	No	1	
	Programming environment	ACE	ACE, PackXpert, PLC	
	ACE Sight	No ✻1	Yes	
	ePLC Connect	No	Yes	
	ePLC I/O	No	Yes	
Connectable controller ✻2		No	SmartController EX, NJ/NX Series ✻3	

✻1. The SmartVision MX cannot be used with the Lite type.
✻2. Choose a controller to suit your application.
✻3. The robot version 2.3.C is required to connect with the NX/NJ Series.

Dimensions

(Unit: mm)

eCobra Inverted 800

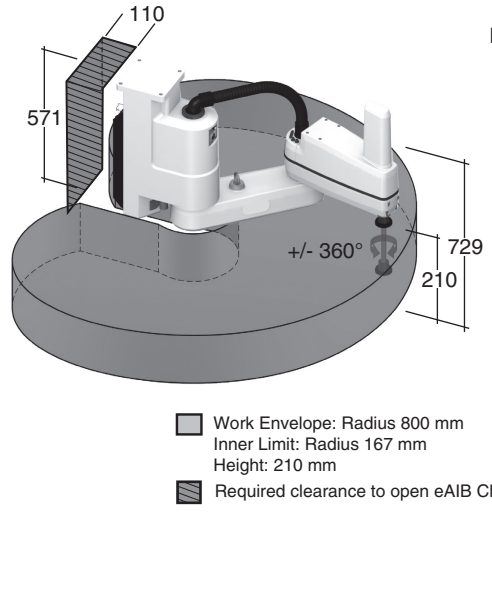

Flange

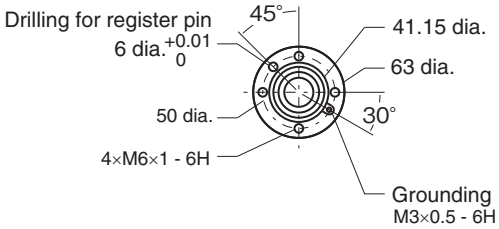

Footprint

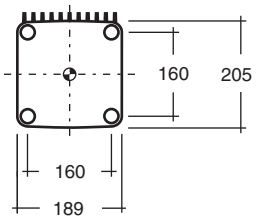

Front panel

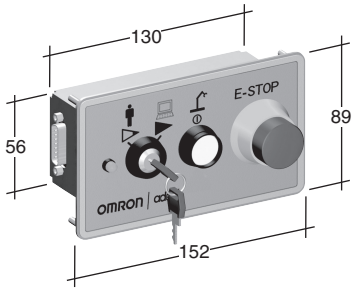

Robot Parts Code and Bundled Accessories

Type	eCobra	eCobra Add-On
eCobra 800 Inverted Lite	17010-18400	---
eCobra 800 Inverted Standard	17111-18400	17113-18400
eCobra 800 Inverted Pro	17211-18400	17213-18400
Overview	Robot + eAIB with fully integrated controls	Robot + eAIB with required connection cables
Purpose	Typical for use in single robot system	Typically added to systems with an existing SmartController EX to create multi-robot systems
Bundled Accessories	• XSYS cable with jumpers, 2m/6ft (13323-000) • Front panel kit (90356-10358)	• XSYS cable with jumpers, 2m/6ft (13323-000) • XSYS cable, 5m/15 ft (11585-000) • DB9 splitter (00411-000) • 1394 latch cable, 5m/15 ft, 13632-045) • eV+ license to connect to controller (14529-103)

Note: OMRON also provides other types of model. Ask your OMRON sales representative for details.

Viper 650

Articulated robot for machining, assembly, and material handling

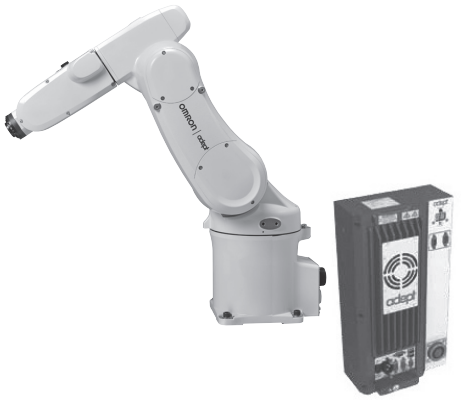

- Ethernet capability to control the robot through the familiar programming language (IEC 61131-3) of Machine Automation Controller NJ/NX Series
- Diagnostics display enables faster trouble shooting
- High-resolution, absolute encoders to provide high accuracy, superior slow-speed following, and easy calibration
- High-efficiency, low-inertia Harmonic Drives and a lightweight arm to deliver maximum acceleration
- Reach 653 mm
- Maximum payload 5 kg
- Weight 28 kg
- Protection IP40 ✻1
- Cleanroom class 10 option

Specifications

Product name		Viper
	Size	650
Model		1720□-36000
Mounting		Table/Floor/Inverted
Number of axes		6
Reach		653 mm
Maximum Payload		5 kg
Repeatability	XYZ	±0.02 mm
Joint Range	Joint 1	±170°
	Joint 2	-190°, +45°
	Joint 3	-29°, +256°
	Joint 4	±190°
	Joint 5	±120°
	Joint 6	±360°
Inetia Moment (Max.)	Joint 4	0.295 kgm^2
	Joint 5	0.295 kgm^2
	Joint 6	0.045 kgm^2
Joint Speeds	Joint 1	328°/s
	Joint 2	300°/s
	Joint 3	375°/s
	Joint 4	375°/s
	Joint 5	375°/s
	Joint 6	600°/s

Product name		Viper
	Size	650
Power Requirements		24VDC: 6A 200 to 240VAC: 10A, single-phase
Protection		IP40 ✻1
Environment Requirements	Ambient Temperature	5 to 40°C
	Humidity Range	5 to 90% (non-condensing)
Weight		28 kg
cULus Compliant		(Yes) ✻2
Basic configuration	Controller	eMotionBlox-60R
	On-board I/O (Input/Output)	12/8
	Conveyor tracking input	2
	RS-232C serial communications port	1
	Programming environment	ACE, PackXpert, PLC
	ACE Sight	Yes
	ePLC Connect	Yes
	ePLC I/O	Yes
Connectable controller ✻3		eMotionBlox-60R, SmartController EX, NJ/NX Series ✻4

✻1. IP54: main body, IP65: robot joints (J4, J5, J6)
✻2. cULus option
✻3. Choose a controller to suit your application.
✻4. The robot version 2.3.C is required to connect with the NX/NJ Series.

Dimensions

(Unit: mm)

Viper 650

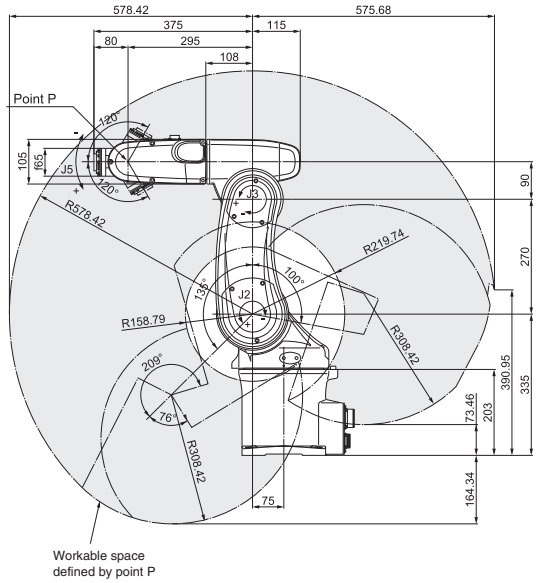

eMotion Blox -60R

Front panel

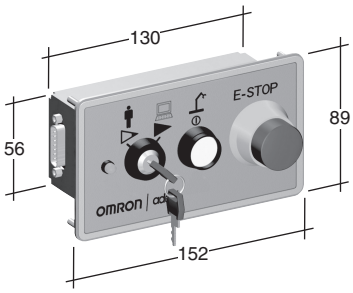

Flange

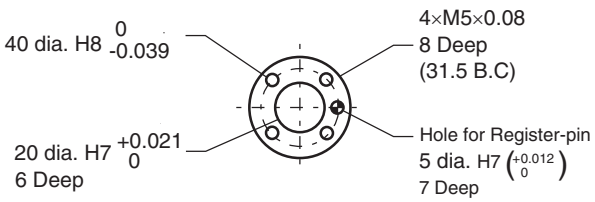

Footprint

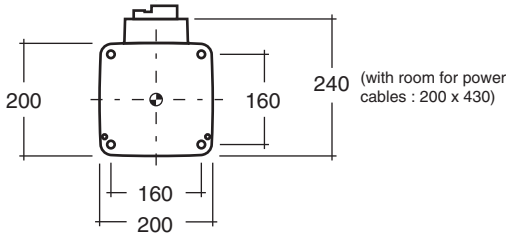

Robot Parts Code and Bundled Accessories

Type	Viper	Viper Add-On
Viper 650	17201-36000	17203-36000
Overview	Robot + eMotionBlox60N amplifier with fully integrated controls	Robot + eMotionBlox60N + required connection cables
Purpose	Typical for use in single robot system	Typically added to systems with an existing SmartController EX to create multi-robot systems
Bundled Accessories	• XSYS cable with jumpers, 2m/6ft (13323-000) • Front panel kit (90356-10358)	• XSYS cable with jumpers, 2m/6ft (13323-000) • XSYS cable, 5m/15 ft (11585-000) • DB9 splitter (00411-000) • 1394 latch cable, 5m/15 ft, 13632-045) • eV+ license to connect to controller (14529-103)

Note: OMRON also provides other types of model. Ask your OMRON sales representative for details.

Viper 850

Articulated robot for machining, assembly, and material handling

- Ethernet capability to control the robot through the familiar programming language (IEC 61131-3) of Machine Automation Controller NJ/NX Series
- Diagnostics display enables faster trouble shooting
- High-resolution, absolute encoders to provide high accuracy, superior slow-speed following, and easy calibration
- High-efficiency, low-inertia Harmonic Drives and a lightweight arm to deliver maximum acceleration
- Reach 855 mm
- Maximum payload 5 kg
- Weight 29 kg
- Protection IP40 ✻1
- Cleanroom class 10 option

Specifications

Product name		Viper
	Size	850
Model		1720□-38000
Mounting		Table/Floor/Inverted
Number of axes		6
Reach		855 mm
Maximum Payload		5 kg
Repeatability	XYZ	±0.03 mm
Joint Range	Joint 1	±170°
	Joint 2	-190°, +45°
	Joint 3	-29°, +256°
	Joint 4	±190°
	Joint 5	±120°
	Joint 6	±360°
Inetia Moment (Max.)	Joint 4	0.295 kgm^2
	Joint 5	0.295 kgm^2
	Joint 6	0.045 kgm^2
Joint Speeds	Joint 1	250°/s
	Joint 2	250°/s
	Joint 3	250°/s
	Joint 4	375°/s
	Joint 5	375°/s
	Joint 6	600°/s

Product name		Viper
	Size	850
Power Requirements		24VDC: 6A 200 to 240VAC: 10A, single-phase
Protection		IP40 ✻1
Environment Requirements	Ambient Temperature	5 to 40°C
	Humidity Range	5 to 90% (non-condensing)
Weight		29 kg
cULus Compliant		---
Basic configuration	Controller	eMotionBlox-60R
	On-board I/O (Input/ Output)	12/8
	Conveyor tracking input	2
	RS-232C serial communications port	1
	Programming environment	ACE, PackXpert, PLC
	ACE Sight	Yes
	ePLC Connect	Yes
	ePLC I/O	Yes
Connectable controller ✻2		eMotionBlox-60R, SmartController EX, NJ/NX Series ✻3

✻1. IP54: main body, IP65: robot joints (J4, J5, J6)
✻2. Choose a controller to suit your application.
✻3. The robot version 2.3.C is required to connect with the NX/NJ Series.

Dimensions

(Unit: mm)

Viper 850

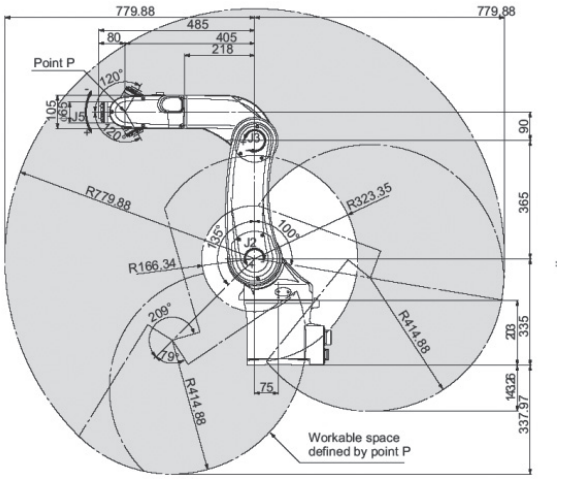

eMotion Blox -60R

Front panel

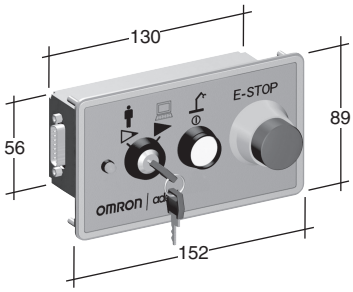

Flange

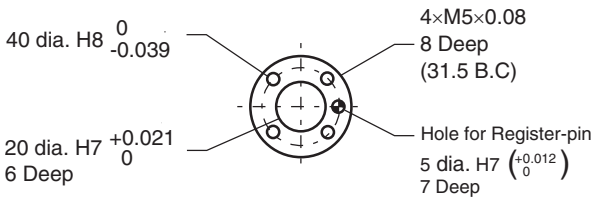

Footprint

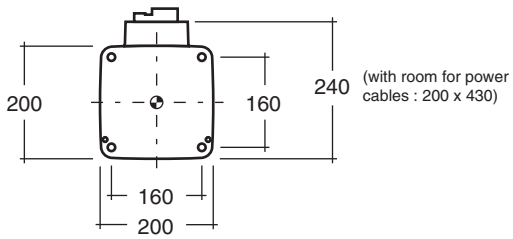

Robot Parts Code and Bundled Accessories

Type	Viper	Viper Add-On
Viper 850	17201-38000	17203-38000
Overview	Robot + eMotionBlox60N amplifier with fully integrated controls	Robot + eMotionBlox60N + required connection cables
Purpose	Typical for use in single robot system	Typically added to systems with an existing SmartController EX to create multi-robot systems
Bundled Accessories	• XSYS cable with jumpers, 2m/6ft (13323-000) • Front panel kit (90356-10358)	• XSYS cable with jumpers, 2m/6ft (13323-000) • XSYS cable, 5m/15 ft (11585-000) • DB9 splitter (00411-000) • 1394 latch cable, 5m/15 ft, 13632-045) • eV+ license to connect to controller (14529-103)

Note: OMRON also provides other types of model. Ask your OMRON sales representative for details.

Automation Control Environment (ACE)

ACE provides a host of innovative features that allow you to increase productivity while streamlining configuration setup

The ACE is a PC-based software package that helps you quickly and easily set up your robot system.
The software makes it easy to configure single and multi-robot systems.

- ACE PackXpert is the intelligent software choice designed to manage packaging systems from integration to deployment
- ACE PackXpert provides the underlying robot programming based on the system configuration
- Built-in customization allows for any line configuration and advanced load balancing
- Wizard-based user-friendly interface to calibrate and teach the robots
- Tightly-integrated vision option (ACE Sight) enables visionguided conveyor-tracking
- Display and share process statistics
- Built-in UI Builder to create a custom operator interface

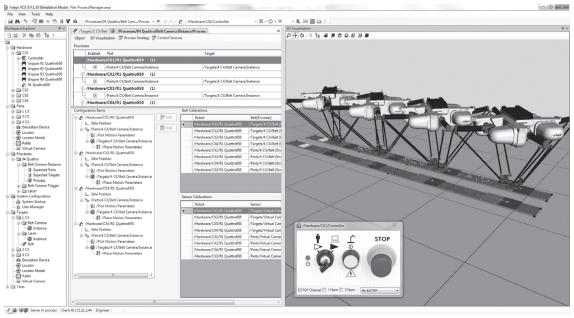

ACE PackXpert

The ACE PackXpert is intelligent software designed to manage a packaging line from integration and deployment through operation.
The software walks you through the configuration of packaging applications by setting up process-specific items, such as controllers, robots, and conveyor belts.

Scalable
Manage robots on packaging lines

Fast
Deploy your application faster through a user-friendly GUI

Reusable
Use across a variety of applications

Complete
Adjust control settings through V+ and C#

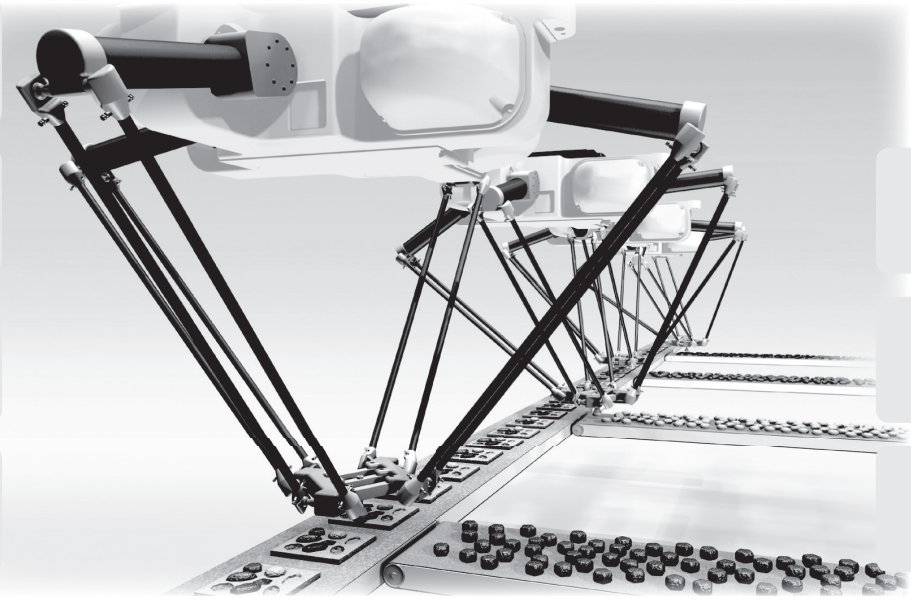

Versatile
No lengthy programming required

Adaptable
Create your own operator interface with the built-in UI Builder

Visual
Get a 3D view of your packaging line

ACE License Configuration

License	Explanation
ACE PackXpert	Enables full functionality of the ACE PackXpert software and includes one Controller license that would allow you to connect one controller. You will need to add the appropriate controller, vision, camera, and OPC server/client licenses required for your application.
ACE Sight Vision Software	Enables the ACE Sight software functionality. This license includes 1 Controller license that would allow you to connect (and communicate with) 1 controller and 2 Camera licenses that would allow you to use up to 2 cameras.
Controller	Provides support for the controllers in the ACE PackXpert and ACE Sight. You must have one controller license for each controller you wish to use with the ACE PackXpert or ACE Sight. For example, 4 Controller licenses would allow you to connect (and communicate with) up to 4 controllers in your application.
Additional Camera Option	Provides support for physical cameras. You must have one Camera license for each physical camera you wish to use in your application. For example, 3 Camera licenses would allow you to use up to 3 physical cameras in your application.
Color Camera Option	Provides support for color vision.
OPC Server	Enables OPC data communications.
OPC Client	Provides OPC client capability for each controller (client). You must have one OPC Client license for each OPC client you wish to communicate with in your application. For example, 2 OPC Client licenses would allow you to use OPC data communications with 2 controllers in your application.

Note: When you create robot programs without using wizards, the ACE license is not required.

System Requirements

Item	Requirement
Operating system (OS)	Windows Vista (32-bit version) / Windows 7 (32-bit/64-bit version) /Windows 8 (32-bit/64-bit version) / Windows 8.1 (32-bit/64-bit version) / Windows 10 (32-bit/64-bit version)
CPU	Intel® Core™ i7 or equivalent or faster recommended.
Main memory	2 GB min. (8 GB min. recommended.)
Video memory	512 MB min.
Hard disk	At least 1 GB of available space
Display	XGA 1,024 × 768, 16 million colors. WXGA 1,280 × 800 min. recommended
Communications ports	USB port (for hardware key), Ethernet port
Supported languages	Japanese, English, German, simplified Chinese

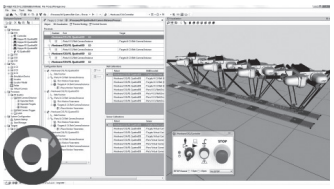

Automation Control Environment (ACE)

The ACE is a PC-based software package that helps you quickly and easily set up your robot system.
The ACE is available to download from Omron Adept Technologies Inc. website.
http://www.adept.com/Robots-Tool

SmartController EX

High-performance robot motion controller capable of high-speed processing

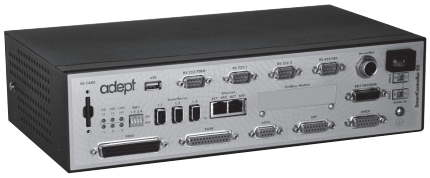

- Controls up to four robots
- Gigabit Ethernet
- 12 inputs/8 outputs
- Ultra-compact form factor for high footprint efficiency
- Integration with configuration software ACE to control complex mechanisms through user-friendly interface

Specifications

Item		Specifications
Model		19300-000
Grounding Method		Ground to less than 100 Ω
Dimensions (Height × Depth × Width)		86 × 187 × 329 mm
Weight		2.6 kg
Power Supply		24 VDC±10%
Current Consumption		5 A
Power Consumption		120 W
Operation Environment	**Ambient Temperature**	5 to 40°C
	Humidity Range	5 to 90% (non-condensing)
Mounting		Panel mount, rack mount, stack mount, desktop
Communications Port		RS-232 (115 kbps), RS422/485, Gigabit Ethernet, DeviceNet
On-board I/O (Input/Output)		12/8
Conveyor tracking input		4

Dimensions

(Unit: mm)

SmartController EX

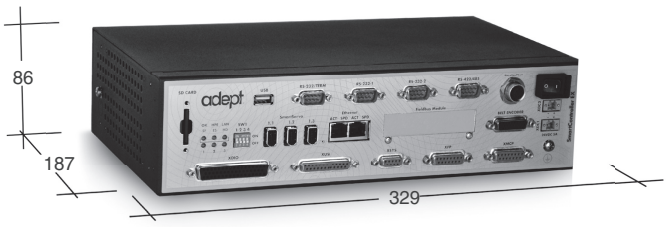

Front panel

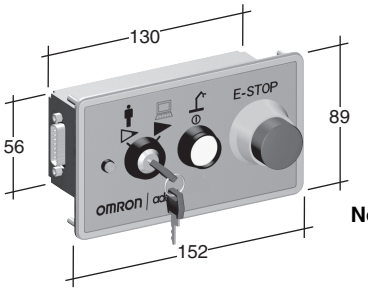

Note: Front Panel is provided with the SmartController EX.

Additional I/O Options

Input Specifications

Item	Specifications
Model	90356-30200/-30100/-40100
ON Voltage	10 V min.
OFF Voltage	3 V max.
OFF Current	0.5 mA
Input Current	2.5 mA min. 7.5 mA max.
ON Delay Time	5 μs max.
OFF Delay Time	5 μs max.
Isolation Method	Photocoupler isolation
Current Consumption from I/O Power Supply	6 mA max. (at power supply voltage of 24 VDC)

Output Specifications

Item	Specifications
Model	90356-30200/-30100/-40100
Rated Output Current	700 mA/point
Maximum Output Current	2.5 A at 50°C ambient 3.7 mA at 25°C ambient
ON Delay Time	100 μs max.
OFF Delay Time	150 μs max.

Vision System

SmartVision MX

Dependable vision system optimized for robot applications

- Fanless construction
- Supports up to eight cameras simultaneously
- Capable of processing high resolution and high frame rate images
- Dedicated software ACE Sight provides easy-to-use object location and inspection tools
- GigE PoE and USB 3.0 ports for a wide variety of cameras
- A wide operating temperature range and SSD ensure high reliability

Specifications

Item		Specifications
Model		14189-901
Grounding Method		Ground to less than 100 Ω
Dimensions (Height × Depth × Width)		68 × 150 × 260 mm
Weight		2.16 kg
CPU		Intel® Core™ i7
Main Memory		8 GB DDR3 RAM
Power Supply		10 to 32 VDC
Current Consumption		4.2 A (24 VDC), 7.0 A max. (when using 4 cameras)
Power Consumption		9 to 36 VDC
Operation Environment	**Ambient Temperature**	0 to 50°C
	Humidity Range	5 to 90% (non-condensing)
Communications Port	**Ethernet**	Gigabit Ethernet × 2, Gigabit Ethernet with PoE × 4 15.7 W per channel
	USB	USB 3.0 × 4, USB 2.0 × 2
	Display	DVI-D × 1 (up to 1,920 × 1,200 @60 Hz), DVI-I × 1 (up to 2,048 × 1,536 @75 Hz)
I/O		8 inputs, 8 outputs

Dimensions

(Unit: mm)

SmartVision MX

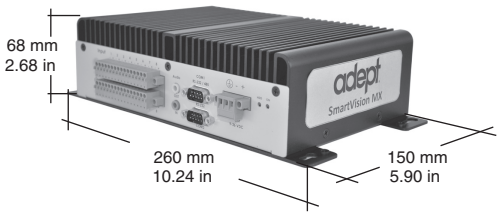

Dongle

Note: The dongle is bundled with the ACE License. Insert the dongle into the USB port of the SmartVision MX.

Camera Variations

	GigE type					
Model	24114-100	24114-101	24114-200	24114-201	24114-250	24114-300
Image elements	1/4-inch CCD	1/4-inch CCD	1/3-inch CCD	1/3-inch CCD	1/1.8-inch CMOS	1-inch CMOS
Effective pixels	640(H) x 480(V)	640(H) x 480(V)	1296(H) x 996(V)	1296(H) x 996(V)	1600(H) x 1200(V)	2048(H) x 2048(V)
Color/Monochrome	Monochrome	Color	Monochrome	Color	Monochrome	Monochrome
Frame rate	120 fps	120 fps	30 fps	30 fps	60 fps	25 fps
Trigger input	• Software trigger • External trigger				• Software trigger	• Software trigger • External trigger
I/F	Gigabit Ethernet (1 Gbit/s)					
Lens mounting	• C mount • CS mount				• C mount	
Power supply voltage	PoE or 12 VDC					
Power consumption (PoE/AUX)	2.3 W/2.0 W		2.5 W/2.2 W		3.0 W	2.8 W/2.5 W
Weight	Approx. 90 g					

Pendant

T20 Pendant

Excellent operability and ergonomic design

- Tested for a 1.5 meter drop onto industrial flooring
- Displays custom messages
- Emergency stop switch (dual channel circuit)
- Enable switches on back
- Lightweight for fatigue-free operation
- Bright display with backlight and contrast adjustment

Dimensions

(Unit: mm)

T20 Pendant

Wall Bracket Dimensions - Optional

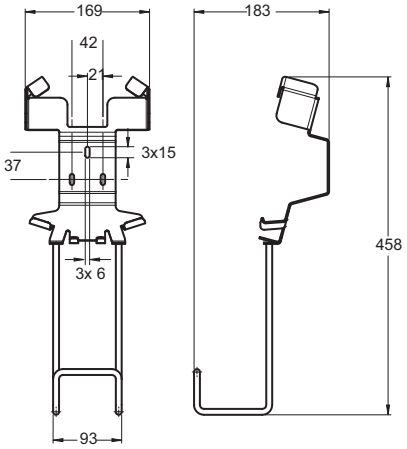

Connection to SmartController

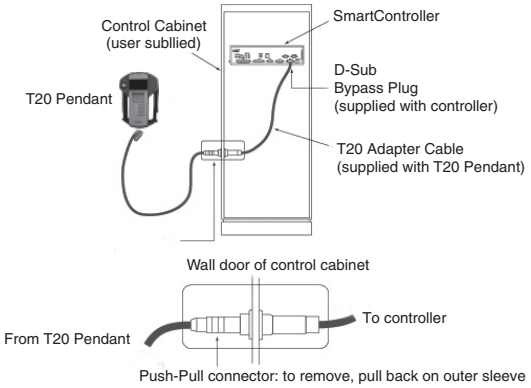

Panel and Front panel Installation

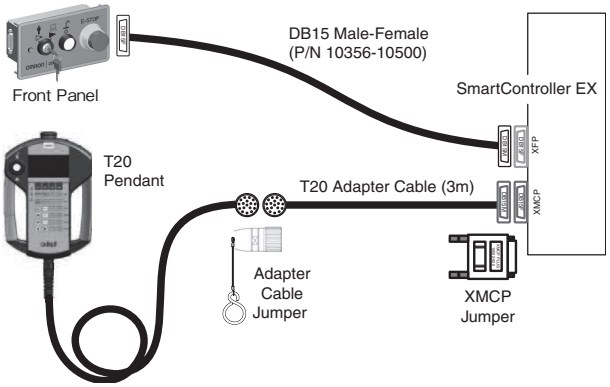

Name	Details	Model
Pendant	T20 Pendant, 10m Cable	10046-010
	T20 Pendant-Jumper Plug	10048-000
	T20 Pendant Wall Bracket	10079-000

System Configuration

Amplifiers with Built-in Controller

Robot	Description
Hornet 565, eCobra	Embedded into the robot. (eAIB) 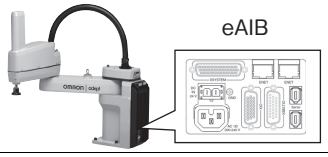
Cobra 350, Viper	A separate amplifier (eMotionBlox). Bundled with the robot.
Quattro	A separate amplifier (SmartController EX). Bundled with the robot. (The SmartController EX can be sold separately.) 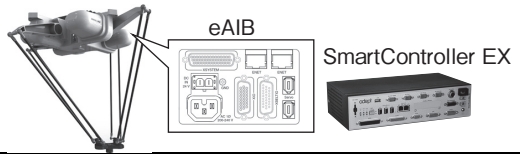

Basic configuration

Control by eAIB/eMotionBlox

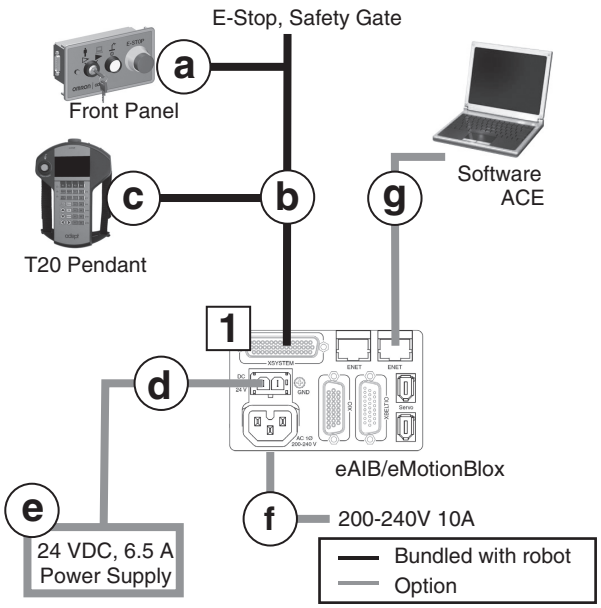

Control by SmartController EX

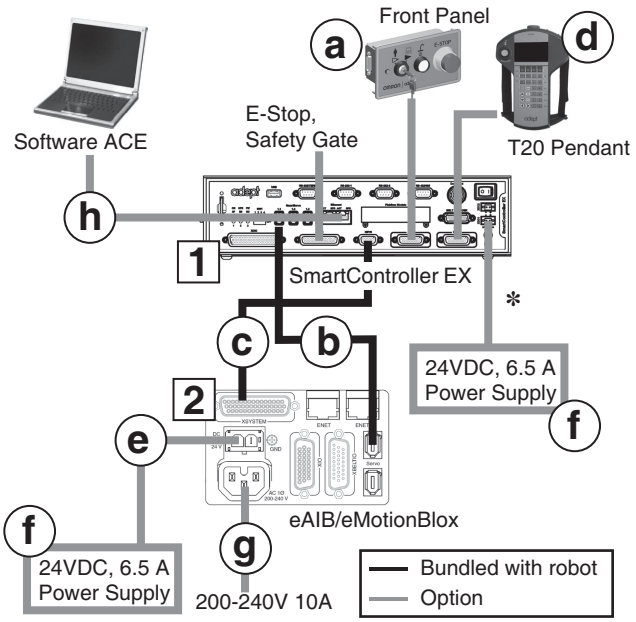

Cobra 350, eCobra, Viper, Hornet

Part	Name	Model	Note	Qty
1	Robot	17□□□-□□□□□		1
a	Front Panel with Cable	90356-10358	Bundled with Robot	(1)
b	eAIB XSYSTEM Cable	13323-000	Bundled with Robot	(1)
c	T20 Pendant with Cable	10046-010		1
d	24 VDC Power Cable	04120-000		1
e	24 VDC, 6.5 A Power Supply	S8JX-G15024C or S8JX-G15024CD		1
f	AC Power Cable	04118-000		1
g	Ethernet Cable	XS6W-6LSZH8SS□□ □CM-Y		1
---	ACE PackXpert License	09187-000	When you create robot programs without using wizards, the ACE license is not required.	1

Quattro

Part	Name	Model	Note	Qty
2	Robot	17214-2□□□□		1
1	SmartController EX	09200-000	Bundled with Robot	(1)
a	Front Panel with Cable	90356-10358	Bundled with Robot	(1)
b	IEEE 1394 cable	13632-045	Bundled with Robot	(1)
c	eAIB XSYS Cable	11585-000	Bundled with Robot	(1)
d	T20 Pendant with Cable	10046-010		1
e	24 VDC Power Cable	04120-000		1
f	24 VDC, 6.5 A Power Supply	S8JX-G15024C or S8JX-G15024CD		2
g	AC Power Cable	04118-000		1
h	Ethernet Cable	XS6W-6LSZH8SS□□□ CM-Y		1
---	ACE PackXpert License	09187-000	When you create robot programs without using wizards, the ACE license is not required.	1

✻ User-supplied shielded power cable.

Vision tracking robot system

Control by eAIB/eMotionBlox with SVMX (When using a vision system)

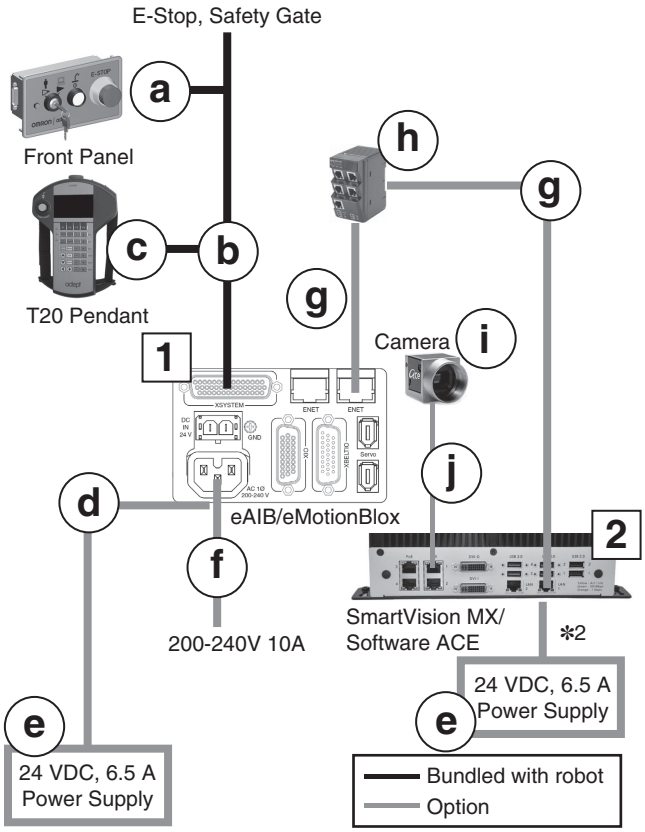

Control by SmartController EX (When using a vision system)

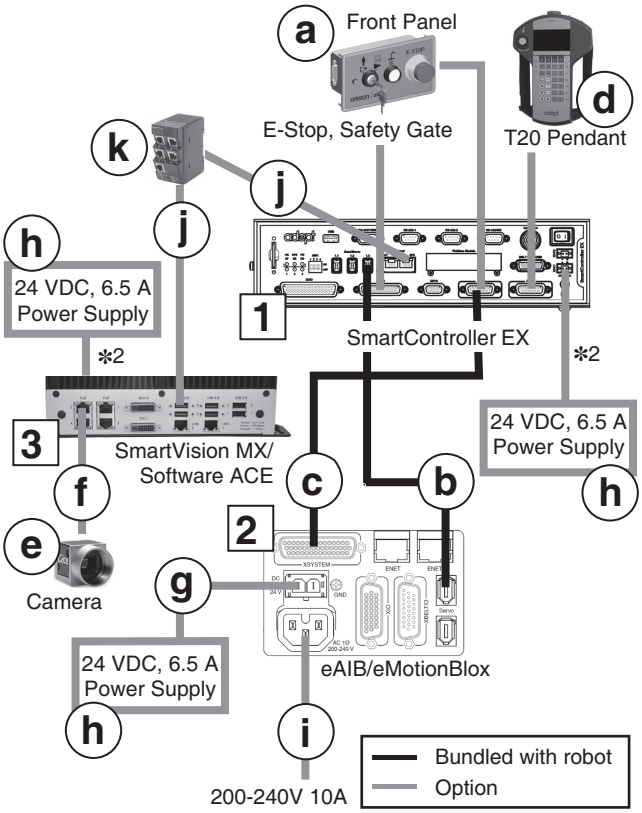

Cobra 350, eCobra, Viper, Hornet

Part	Name	Model	Note	Qty
1	Robot	17□□□-□□□□□		1
a	Front Panel with Cable	90356-10358	Bundled with Robot	(1)
b	eAIB XSYSTEM Cable	13323-000	Bundled with Robot	(1)
c	T20 Pendant with Cable	10046-010		1
d	24 VDC Power Cable	04120-000		1
e	24 VDC, 6.5 A Power Supply	S8JX-G15024C or S8JX-G15024CD		2
f	AC Power Cable	04118-000		1
g	Ethernet Cable	XS6W-6LSZH8SS□□□CM-Y		2
h	Industrial Switching Hubs	W4S1-05C		1
2	SmartVision MX	14189-901	Bundling a 24 VDC connector	1
i	Camera	241□□-□□□		1 ∗1
j	Camera cable	---	Bundled with Camera	1 ∗1
---	ACE PackXpert with ACE Sight Vision License	09187-010	Including 2 monochrome camera licenses ∗3	1

∗1. Qty depends on a system.
∗2. User-supplied shielded power cable.
∗3. When using color cameras, purchase the ACE License Color Camera Option (09287-040).
When using 3 or more cameras, purchase the ACE License Additional Camera Option (09287-000) for more than 2 cameras.

Quattro

Part	Name	Model	Note	Qty
2	Robot	17214-2□□□□		1
1	SmartController EX	09200-000	Bundled with Robot	(1)
a	Front Panel with Cable	90356-10358	Bundled with Robot	(1)
b	IEEE 1394 cable	13632-045	Bundled with Robot	(1)
c	eAIB XSYS Cable	11585-000	Bundled with Robot	(1)
d	T20 Pendant with Cable	10046-010		1
3	SmartVision MX	14189-901		1
e	Camera	241□□-□□□		1 ∗1
f	Camera cable	---	Bundled with Camera	1 ∗1
g	24 VDC Power Cable	04120-000		1
h	24 VDC, 6.5 A Power Supply	S8JX-G15024C or S8JX-G15024CD		3
i	AC Power Cable	04118-000		1
j	Ethernet Cable	XS6W-6LSZH8SS□□□CM-Y		2
k	Industrial Switching Hubs	W4S1-05C		1
---	ACE PackXpert with ACE Sight Vision License	09187-010	Including 2 monochrome camera licenses ∗3	1

∗1. Qty depends on a system.
∗2. User-supplied shielded power cable.
∗3. When using color cameras, purchase the ACE License Color Camera Option (09287-040).
When using 3 or more cameras, purchase the ACE License Additional Camera Option (09287-000) for more than 2 cameras.

Conveyor tracking robot system

Control by eAIB/eMotionBlox with SVMX (When using a vision system)

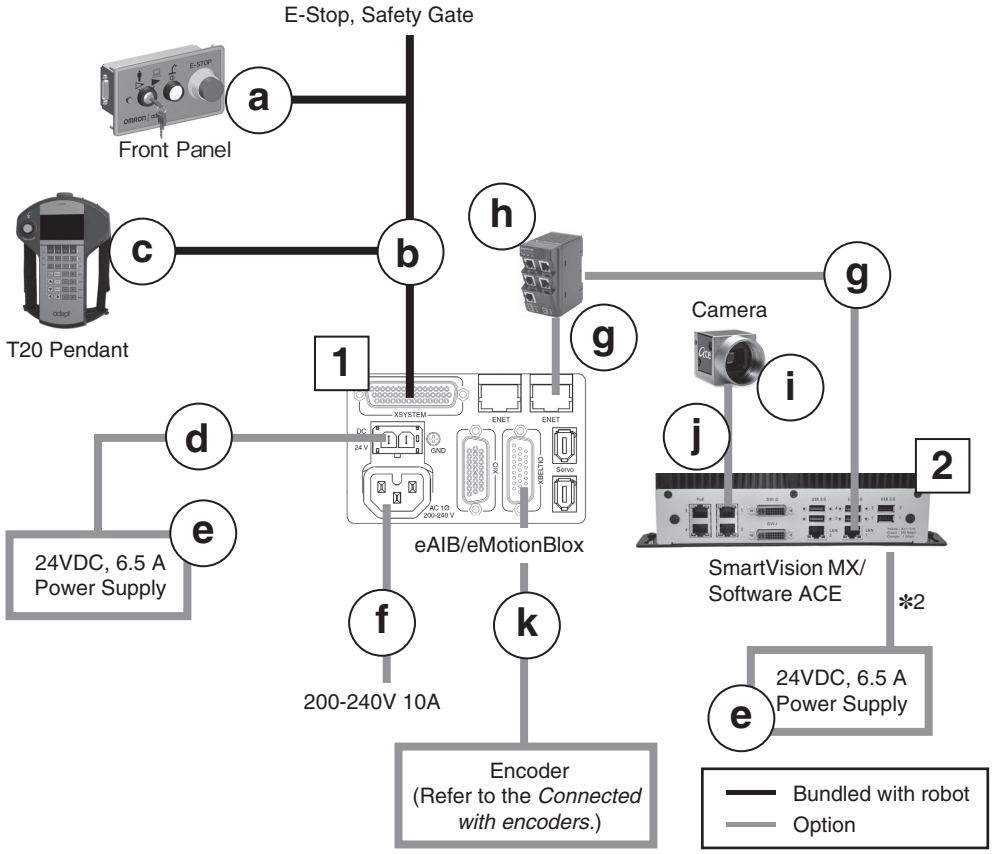

Cobra 350, eCobra, Viper, Hornet

Part	Name	Model	Note	Qty
1	Robot	17□□□-□□□□□		1
a	Front Panel with Cable	90356-10358	Bundled with Robot	(1)
b	eAIB XSYSTEM Cable	13323-000	Bundled with Robot	(1)
c	T20 Pendant with Cable	10046-010		1
d	24 VDC Power Cable	04120-000		2
e	24 VDC, 6.5 A Power Supply	S8JX-G15024C or S8JX-G15024CD		1
f	AC Power Cable	04118-000		1
g	Ethernet Cable	XS6W-6LSZH8SS□□□CM-Y		2
h	Industrial Switching Hubs	W4S1-05C		1
2	SmartVision MX	14189-901	Bundling a 24 VDC connector	1
i	Camera	241□□-□□□		1 *1
j	Camera cable	---	Bundled with Camera	1 *1
k	XBELTIO Cable	13463-000		1
---	ACE PackXpert with ACE Sight Vision License	09187-010	Including 2 monochrome camera licenses *3	1

***1.** Qty depends on a system.
***2.** User-supplied shielded power cable.
***3.** When using color cameras, purchase the ACE License Color Camera Option (09287-040).
When using 3 or more cameras, purchase the ACE License Additional Camera Option (09287-000) for more than 2 cameras.

Conveyor tracking robot system by SCEX

Control by SCEX with SVMX (When using a vision system)

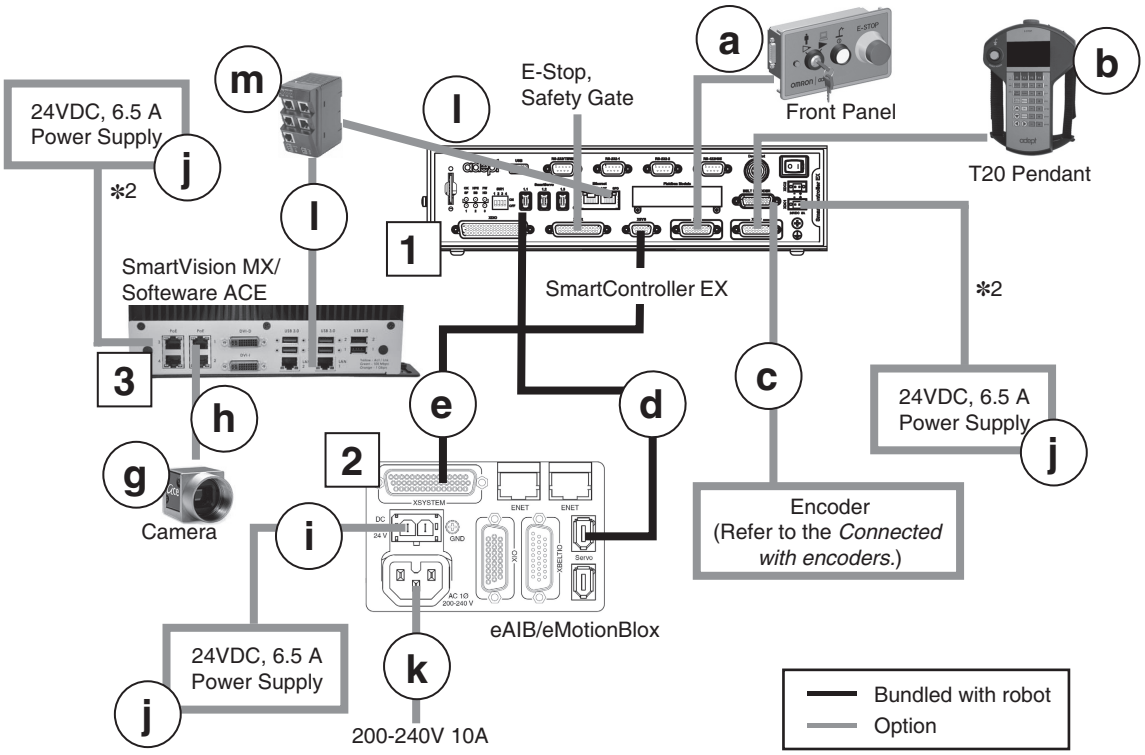

Cobra 350, eCobra, Viper, Hornet

Part	Name	Model	Note	Qty
1	SmartController EX	19300-000		1
a	Front Panel with Cable	90356-10358	Bundled with SmartController EX	(1)
b	T20 Pendant with Cable	10046-010		1
c	SCEX-BELT, Y-Adapter Cable	09550-000		1
2	Robot Add on	17□□3-□□□□□		1
d	IEEE 1394 cable	13632-045	Bundled with Robot Add on	(1)
e	eAIB XSYS Cable	11585-000	Bundled with Robot Add on	(1)
f	DB9 splitter	00411-000	Bundled with Robot Add on (Not used in this configuration)	(1)
3	SmartVision MX	14189-901	Bundling a 24 VDC connector	1
g	Camera	241□□-□□□		1 ✻1
h	Camera cable	---	Bundled with Camera	1 ✻1
i	24 VDC Power Cable	04120-000		1
j	24 VDC, 6.5 A Power Supply	S8JX-G15024C or S8JX-G15024CD		3
k	AC Power Cable	04118-000		1
l	Ethernet Cable	XS6W-6LSZH8SS□□ □CM-Y		2
m	Industrial Switching Hubs	W4S1-05C		1
---	ACE PackXpert with ACE Sight Vision License	09187-010	Including 2 monochrome camera licenses ✻3	1

✻1. Qty depends on a system.
✻2. User-supplied shielded power cable.
✻3. When using color cameras, purchase the ACE License Color Camera Option (09287-040).
When using 3 or more cameras, purchase the ACE License Additional Camera Option (09287-000) for more than 2 cameras.

Quattro

Part	Name	Model	Note	Qty
2	Robot	17214-2□□□□		1
1	SmartController EX	09200-000	Bundled with Robot	(1)
a	Front Panel with Cable	90356-10358	Bundled with Robot	(1)
d	IEEE 1394 cable	13632-045	Bundled with Robot	(1)
e	eAIB XSYS Cable	11585-000	Bundled with Robot	(1)
b	T20 Pendant with Cable	10046-010		1
c	SCEX-BELT, Y-Adapter Cable	09550-000		1
3	SmartVision MX	14189-901	Bundling a 24 VDC connector	1
g	Camera	241□□-□□□		1 ✻1
h	Camera cable	---	Bundled with Camera	1 ✻1
i	24 VDC Power Cable	04120-000		1
j	24 VDC, 6.5 A Power Supply	S8JX-G15024C or S8JX-G15024CD		3
k	AC Power Cable	04118-000		1
l	Ethernet Cable	XS6W-6LSZH8SS□□ □CM-Y		2
m	Industrial Switching Hubs	W4S1-05C		1
---	ACE PackXpert with ACE Sight Vision License	09187-010	Including 2 monochrome camera licenses ✻3	1

✻1. Qty depends on a system.
✻2. User-supplied shielded power cable.
✻3. When using color cameras, purchase the ACE License Color Camera Option (09287-040).
When using 3 or more cameras, purchase the ACE License Additional Camera Option (09287-000) for more than 2 cameras.

Conveyor tracking dual-robotics system

2 robots control by SCEX with SVMX (When using a vision system)

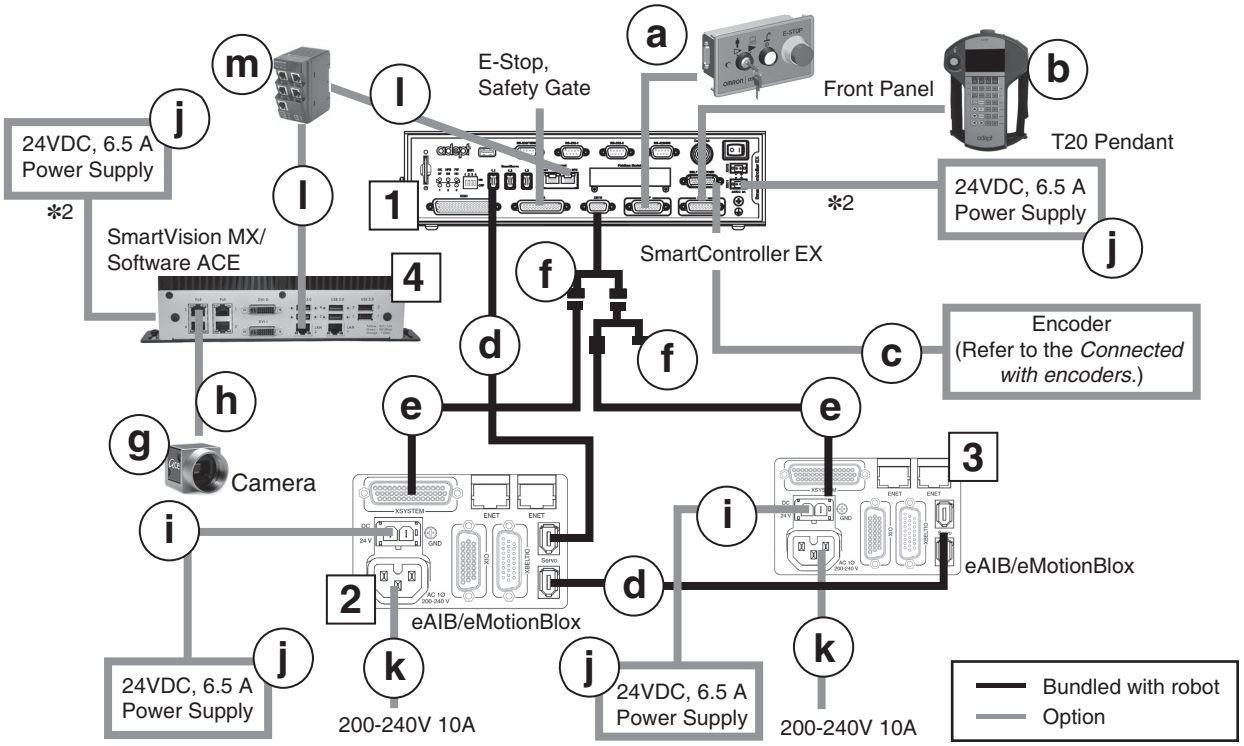

Cobra 350, eCobra, Viper, Hornet

Part	Name	Model	Note	Qty
1	SmartController EX	19300-000		1
a	Front Panel with Cable	90356-10358	Bundled with SmartController EX	(1)
b	T20 Pendant with Cable	10046-010		1
c	SCEX-BELT, Y-Adapter Cable	09550-000		1
2, 3	Robot Add on	17□□3-□□□□□		2
d	IEEE 1394 cable	13632-045	Bundled with Robot Add on	(2)
e	eAIB XSYS Cable	11585-000	Bundled with Robot Add on	(2)
f	DB9 splitter	00411-000	Bundled with Robot Add on	(2)
4	SmartVision MX	14189-901	Bundling a 24 VDC connector	1
g	Camera	241□□-□□□		1 ∗1
h	Camera cable	---	Bundled with Camera	1 ∗1
i	24 VDC Power Cable	04120-000		2
j	24 VDC, 6.5 A Power Supply	S8JX-G15024C or S8JX-G15024CD		4
k	AC Power Cable	04118-000		2
l	Ethernet Cable	XS6W-6LSZH8SS□□ □CM-Y		2
m	Industrial Switching Hubs	W4S1-05C		1
---	ACE PackXpert with ACE Sight Vision License	09187-010	Including 2 monochrome camera licenses ∗3	1

∗1. Qty depends on a system.
∗2. User-supplied shielded power cable.
∗3. When using color cameras, purchase the ACE License Color Camera Option (09287-040).
When using 3 or more cameras, purchase the ACE License Additional Camera Option (09287-000) for more than 2 cameras.

Quattro

Part	Name	Model	Note	Qty
2	Robot	17214-2□□□□		1
1	SmartController EX	09200-000	Bundled with Robot	(1)
a	Front Panel with Cable	90356-10358	Bundled with Robot	(1)
d	IEEE 1394 cable	13632-045	Bundled with Robot	(1)
e	eAIB XSYS Cable	11585-000	Bundled with Robot	(1)
b	T20 Pendant with Cable	10046-010		1
c	SCEX-BELT, Y-Adapter Cable	09550-000		1
3	Robot Add on	17203-2□□□□		1
d	IEEE 1394 cable	13632-045	Bundled with Robot Add on	(1)
e	eAIB XSYS Cable	11585-000	Bundled with Robot Add on	(1)
f	DB9 splitter	00411-000	Bundled with Robot Add on	(1)
4	SmartVision MX	14189-901	Bundling a 24 VDC connector	1
g	Camera	241□□-□□□		1 ∗1
h	Camera cable	---	Bundled with Camera	1 ∗1
i	24 VDC Power Cable	04120-000		2
j	24 VDC, 6.5 A Power Supply	S8JX-G15024C or S8JX-G15024CD		4
k	AC Power Cable	04118-000		2
l	Ethernet Cable	XS6W-6LSZH8SS□□ □CM-Y		2
m	Industrial Switching Hubs	W4S1-05C		1
---	ACE PackXpert with ACE Sight Vision License	09187-010	Including 2 monochrome camera licenses ∗3	1

∗1. Qty depends on a system.
∗2. User-supplied shielded power cable.
∗3. When using color cameras, purchase the ACE License Color Camera Option (09287-040).
When using 3 or more cameras, purchase the ACE License Additional Camera Option (09287-000) for more than 2 cameras.

Vision tracking robot system

Control by eAIB/eMotionBlox (Status monitoring by NJ/NX Series)

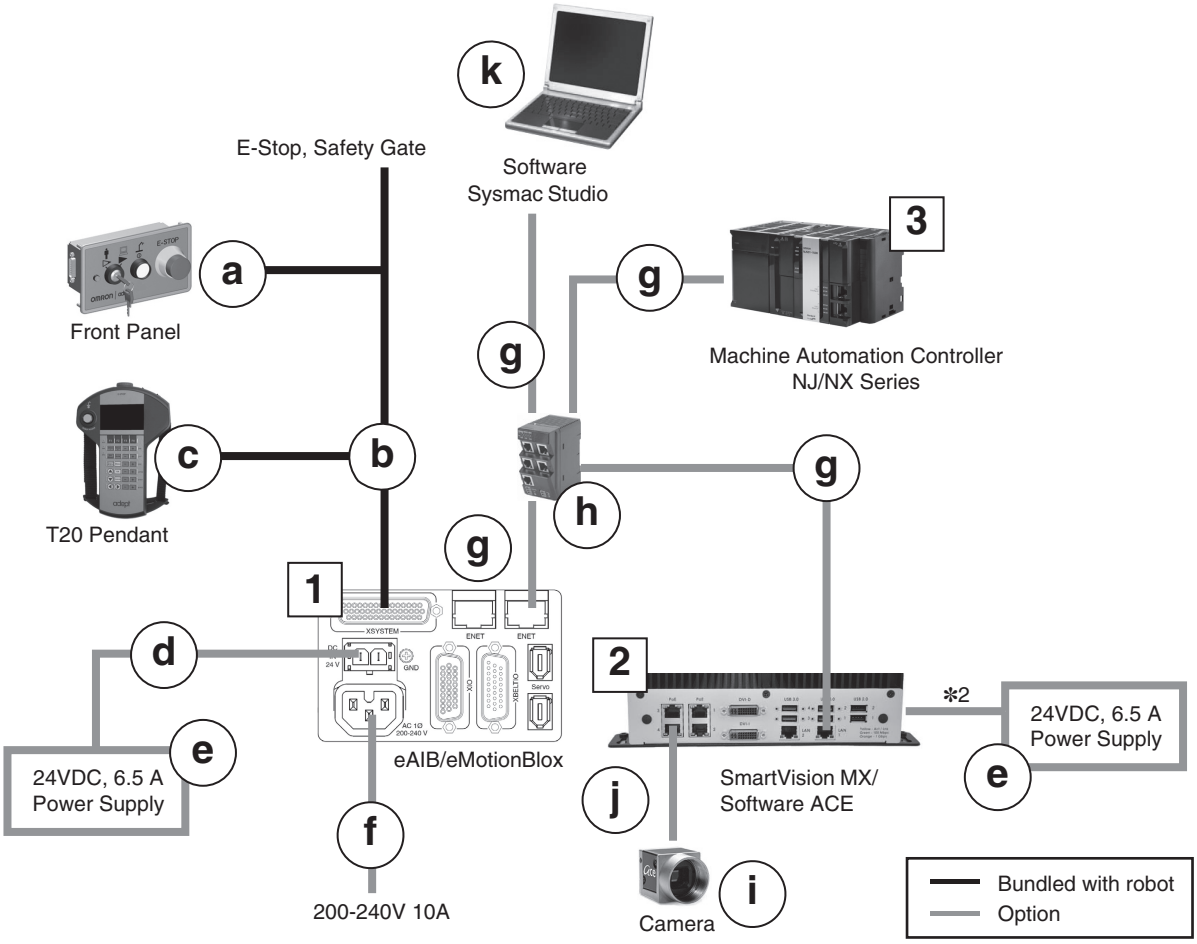

Cobra 350, eCobra, Viper, Hornet

Part	Name	Model	Note	Qty
1	Robot	17□□1-□□□□□		1
a	Front Panel with Cable	90356-10358	Bundled with Robot	(1)
b	eAIB XSYSTEM Cable	13323-000	Bundled with Robot	(1)
c	T20 Pendant with Cable	10046-010		1
d	24 VDC Power Cable	04120-000		1
e	24 VDC, 6.5 A Power Supply	S8JX-G15024C or S8JX-G15024CD		2
f	AC Power Cable	04118-000		1
g	Ethernet Cable	XS6W-6LSZH8SS□□□CM-Y		4
h	Industrial Switching Hubs	W4S1-05C		1
2	SmartVision MX	14189-901	Bundling a 24 VDC connector	1
i	Camera	241□□-□□□		1 ✻1
j	Camera cable	---	Bundled with Camera	1 ✻1
3	Machine Automation Controller NJ/NX Series	NJ/NX		1
k	Automation software Sysmac Studio	SYSMAC-SE2□□□		1
---	ACE PackXpert with ACE Sight Vision License	09187-010	Including 2 monochrome camera licenses ✻3	1

✻1. Qty depends on a system.
✻2. User-supplied shielded power cable.
✻3. When using color cameras, purchase the ACE License Color Camera Option (09287-040).
When using 3 or more cameras, purchase the ACE License Additional Camera Option (09287-000) for more than 2 cameras.

Connected with encoders

SmartController EX

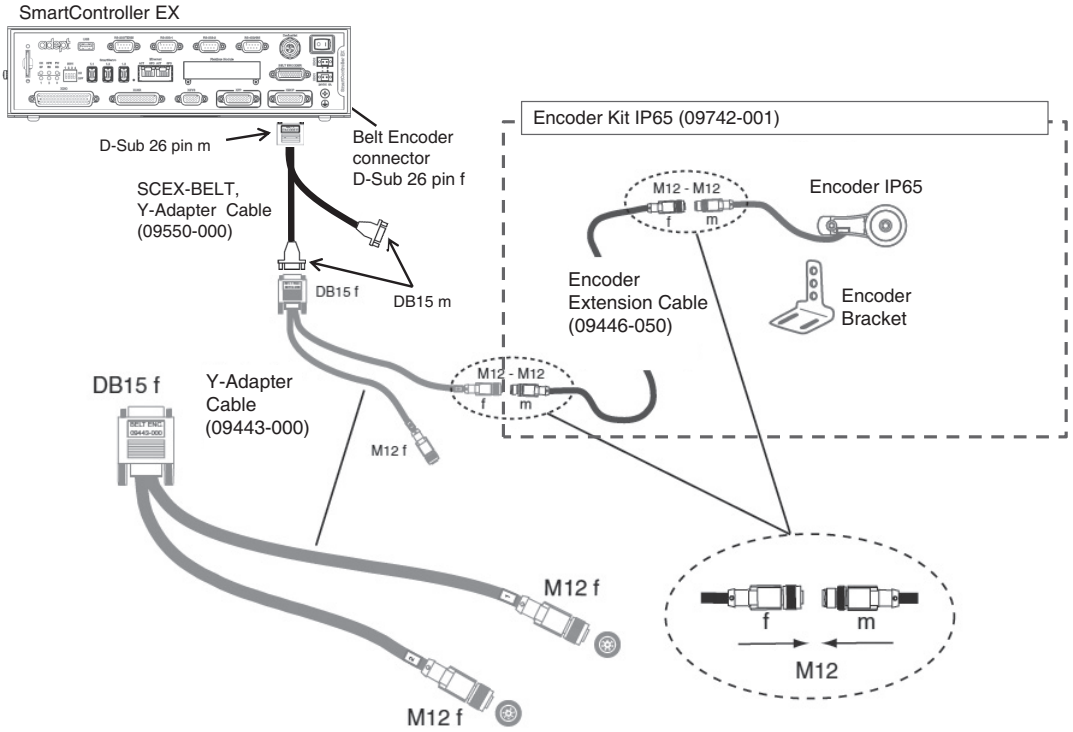

eAIB/eMotionBlox

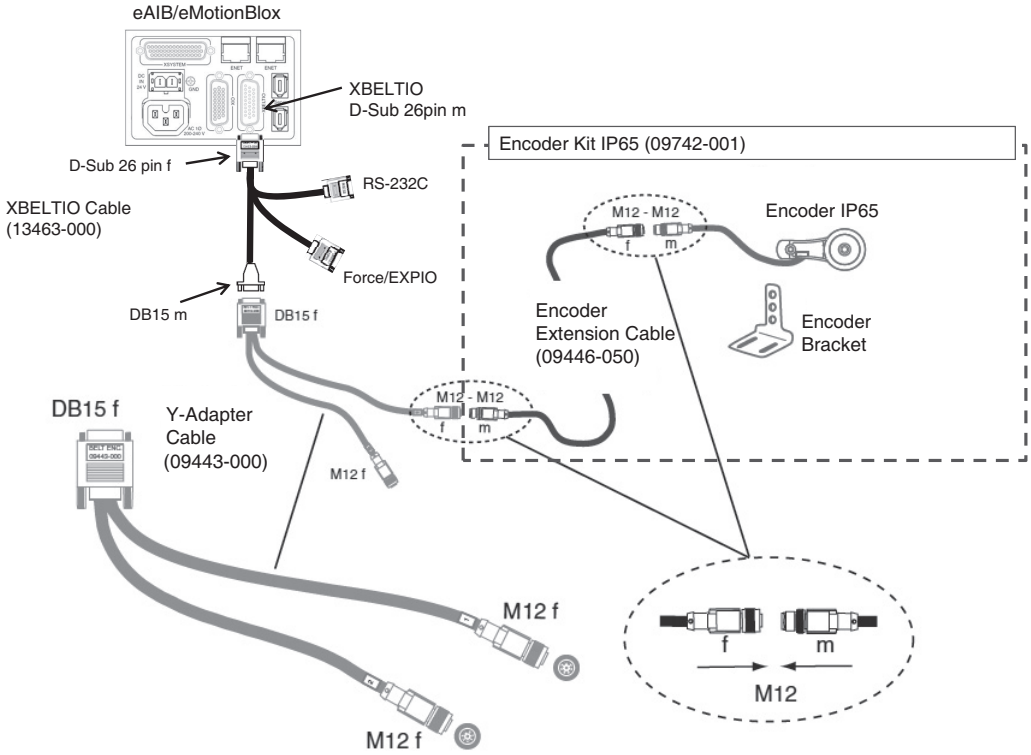

Protection and Cleanroom Classes

Type	Name	Specifications	Option	Remarks
Parallel Robots	**Hornet 565**	IP67: arms and platform IP65: underside of robot IP20: topside of robot Class 1000	IP65: topside of robot	The addition of the cable sealing kit raises the IP rating of the topside of the robot to IP65.
	Quattro 650H **Quattro 800H**	IP67: arms and platform Class 1000	IP65: robot base	The addition of the cable sealing kit raises the IP rating of the topside of the robot to IP65.
	Quattro 650HS	IP67: arms and platform IP66: robot base Class 1000	---	Mount the Cable Inlet Box (09564-000) on the topside of the robot.
SCARA Robots	**Cobra 350**	IP20	Class10 Cleanroom model	The version with the option has a different model number.
	eCobra 600	IP20	Class10 Cleanroom model	The version with the option has a different model number.
	eCobra 800 **eCobra 800 Inverted**	IP20	IP65, Class10 Cleanroom model	The version with the option has a different model number.
Articulated Robots	**Viper 650** **Viper 850**	IP40	IP54: robot main body IP65: robot joints (J4, J5, J6) Class10 Cleanroom model	The version with the option has a different model number.

Ordering Information

Industrial Robots

Type	Name	Model
Parallel Robots	Hornet 565 4AXIS	17201-45604
	Hornet 565 3AXIS	17201-45600
	Hornet 565 4AXIS (Add on)	17203-45604
	Hornet 565 3AXIS (Add on)	17203-45600
	Quattro 650H P30	17214-26000
	Quattro 650H P31	17214-26001
	Quattro 650H P32	17214-26002
	Quattro 650H P34	17214-26004
	Quattro 650HS P30	17214-26010
	Quattro 650HS P31	17214-26011
	Quattro 650HS P32	17214-26012
	Quattro 650HS P34	17214-26014
	Quattro 800H P30	17214-26300
	Quattro 800H P31	17214-26301
	Quattro 800H P32	17214-26302
	Quattro 800H P34	17214-26304
	Quattro 650H P30 (Add on)	17213-26000
	Quattro 650H P31 (Add on)	17213-26001
	Quattro 650H P32 (Add on)	17213-26002
	Quattro 650H P34 (Add on)	17213-26004
	Quattro 650HS P30 (Add on)	17213-26010
	Quattro 650HS P31 (Add on)	17213-26011
	Quattro 650HS P32 (Add on)	17213-26012
	Quattro 650HS P34 (Add on)	17213-26014
	Quattro 800H P30 (Add on)	17213-26300
	Quattro 800H P31 (Add on)	17213-26301
	Quattro 800H P32 (Add on)	17213-26302
	Quattro 800H P34 (Add on)	17213-26304
SCARA Robots	Cobra 350	17201-13000
	eCobra 600 Lite	17010-16000
	eCobra 600 Standard	17111-16000
	eCobra 600 Pro	17211-16000
	eCobra 800 Lite	17010-18000
	eCobra 800 Standard	17111-18000
	eCobra 800 Pro	17211-18000
	eCobra 800 Inverted Lite	17010-18400
	eCobra 800 Inverted Standard	17111-18400
	eCobra 800 Inverted Pro	17211-18400
	Cobra 350 (Add on)	17203-13000
	eCobra 600 Standard (Add on)	17113-16000
	eCobra 600 Pro (Add on)	17213-16000
	eCobra 800 Standard (Add on)	17113-18000
	eCobra 800 Pro (Add on)	17213-18000
	eCobra 800 Inverted Standard (Add on)	17113-18400
	eCobra 800 Inverted Pro (Add on)	17213-18400
Articulated Robots	Viper 650	17201-36000
	Viper 850	17201-38000
	Viper 650 (Add on)	17203-36000
	Viper 850 (Add on)	17203-38000

Options

Type	Name/Specifications	Model
Robot Controller	SmartController EX	19300-000
Pendant	T20 Pendant with 10m Cable	10046-010
	T20 Pendant-Jumper Plug	10048-000
	T20 Pendant Wall Bracket	10079-000
Sensor Controllers	SmartVision MX	14189-901
Camera	GigE PoE, 640 x 480 dots, 120 fps, Monochrome, CCD (1/4-inch equivalent), camera cables included (10 m)	24114-100
	GigE PoE, 640 x 480 dots, 120 fps, Color, CCD (1/4-inch equivalent), camera cables included (10 m)	24114-101
	GigE PoE, 1296 x 996 dots, 30 fps, Monochrome, CCD (1/3-inch equivalent), camera cables included (10 m)	24114-200
	GigE PoE, 1296 x 996 dots, 30 fps, Color, CCD (1/3-inch equivalent), camera cables included (10 m)	24114-201
	GigE PoE, 1600 x 1200 dots, 60 fps, Monochrome, CMOS (1/1.8-inch equivalent), camera cables included (10 m)	24114-250
	GigE PoE, 2048 x 2048 dots, 25 fps, Monochrome, CMOS (1-inch equivalent), camera cables included (10 m)	24114-300
Belt Encoder (Conveyor-Tracking)	Encoder Kit IP65	09742-001
	Y-Adapter Cable, 3 m	09443-000
	Encoder Extension Cable, 5 m	09446-050
	SCEX-BELT,Y-Adapter Cable	09550-000
	XBELTIO Cable	13463-000
Additional I/O Options	IO Blox 8 inputs/8 outputs (IO Blox - connects to robot)	90356-30200
	IO Blox 8 inputs/8 outputs (expansion - connects to previous IO Blox)	90356-30100
	IO Blox Extension Cable, 0.30m (connects IO Blox to IO Blox)	04679-003
	IO Blox Extension Cable, 3.0m (connects IO Blox to IO Blox)	04679-030
	IO Blox Extension Cable, 3.0m (connects IO Blox to robot)	04677-030
	Termination Block, 12inputs/8 outputs	90356-40100
Front panel	Front Panel	90356-10358
	Front Panel Cable	10356-10500
Power Supply/Cable	AC Power Cable	04118-000
	24 VDC Power Cable	04120-000
	24 VDC, 6.5 A, 150 W (Front Mounting), Power Supply	S8JX-G15024C ✻1
	24 VDC, 6.5 A, 150 W (DIN-Rail Mounting), Power Supply	S8JX-G15024CD ✻1
	1394 Cable, 4.5m	13632-045
	eAIB XSYSTEM Cable Assembly	13323-000
	DB9 Splitter	00411-000
	eAIB XSYS Cable	11585-000
	Ethernet Cable	XS6W-6LSZH8SS□□□CM-Y ✻2
	Industrial Switching Hubs	W4S1-05C ✻3
ACE License	Automation Control Environment (ACE)	Please download it from following URL: http://www.adept.com/Robots-Tool
	ACE PackXpert	09187-000
	ACE Sight Vision Software	01056-030
	Additional Camera Option	09287-000
	Color Camera Option	09287-040
	ACE PackXpert with ACE Sight Vision This license contains an ACE PackXpert license and an ACE Sight license.	09187-010

Type	Name/Specifications	Model
Related Products	Machine Automation Controller NJ/NX Series	NJ/NX ✻5
	Automation Software Sysmac Studio	SYSMAC-SE2□□□ ✻5
	Collection of software functional components Sysmac Library Adept Robot Control Library	SYSMAC-XR009 ✻6

Note: Contact your Omron representative for lenses, lights, and licenses.
✻**1.** Refer to the Switch Mode Power Supply Catalog (Cat.No.T041) for details.
✻**2.** Refer to the Industrial Ethernet Cables Catalog (Cat.No.G019) for details.
✻**3.** Refer to the Industrial Switching Hubs Catalog (Cat.No.V227) for details.
✻**4.** You must purchase all the required licenses at the time you purchase as the license cannot be added afterwards.
✻**5.** Refer to the Sysmac Catalog (Cat.No.P072) for details.
✻**6.** Refer to the Sysmac Library Catalog (Cat.No.P106) for details.

Sysmac Library
The Sysmac Library is a collection of software functional components that can be used in programs for the NJ/NX Machine Automation Controllers.
Please download it from following URL and install to Sysmac Studio Automation Software.
http://www.ia.omron.com/sysmac_library/
The Adept Robot Control Library allows you to control parallel, SCARA, and articulated robots manufactured by Omron Adept Technologies Inc. from the NJ/NX Machine Automation Controller by using the same instructions and programming methods.

Related Documentation

Cat. No.	Manual
I590	Robot Safety Guide
I591	Cobra 350 Robot User's Guide
I592	Cobra 350 Robot ePLC Quick Setup Guide
I593	eCobra 600, 800, and 800 Inverted Robots User's Guide
I594	eCobra 600, 800, and 800 Inverted Robots ePLC Quick Setup Guide
I595	Hornet 565 Robot Qucik Setup Guide
I596	Hornet 565 Robot User's Guide
I597	Quattro 650H/650HS/800H/800HS User's Guide
I598	Quattro 650H/650HS/800H/800HS ePLC Quick Setup Guide
I599	Viper 650/850 Robot with eMB-60R User's Guide
I600	Viper 650/850 ePLC Quick Setup Guide
I601	T20 Pendant User's Guide
I602	SmartController EX user's guide
I603	ACE User's Guide
I604	eV+ Language User's Guide
I605	eV+ Language Reference Guide
I606	eV+ Operating System User's Guide
I607	eV+ Operating System Reference Guide
I608	SmartVision MX User's Guide
I609	ACE Sight Reference Guide

Terms and Conditions Agreement

Read and Understand this Catalog

Please read and understand this catalog before purchasing the products. Please consult your OMRON representative if you have any questions or comments.

Warranty and Limitations of Liability

WARRANTY

(a) Exclusive Warranty. Omron's exclusive warranty is that the Products will be free from defects in materials and workmanship for a period of twelve months from the date of sale by Omron (or such other period expressed in writing by Omron). Omron disclaims all other warranties, express or implied.

(b) Limitations. OMRON MAKES NO WARRANTY OR REPRESENTATION, EXPRESS OR IMPLIED, ABOUT NON-INFRINGEMENT, MERCHANTABILITY OR FITNESS FOR A PARTICULAR PURPOSE OF THE PRODUCTS. BUYER ACKNOWLEDGES THAT IT ALONE HAS DETERMINED THAT THE PRODUCTS WILL SUITABLY MEET THE REQUIREMENTS OF THEIR INTENDED USE.

Omron further disclaims all warranties and responsibility of any type for claims or expenses based on infringement by the Products or otherwise of any intellectual property right. (c) Buyer Remedy. Omron's sole obligation hereunder shall be, at Omron's election, to (i) replace (in the form originally shipped with Buyer responsible for labor charges for removal or replacement thereof) the non-complying Product, (ii) repair the non-complying Product, or (iii) repay or credit Buyer an amount equal to the purchase price of the non-complying Product; provided that in no event shall Omron be responsible for warranty, repair, indemnity or any other claims or expenses regarding the Products unless Omron's analysis confirms that the Products were properly handled, stored, installed and maintained and not subject to contamination, abuse, misuse or inappropriate modification. Return of any Products by Buyer must be approved in writing by Omron before shipment. Omron Companies shall not be liable for the suitability or unsuitability or the results from the use of Products in combination with any electrical or electronic components, circuits, system assemblies or any other materials or substances or environments. Any advice, recommendations or information given orally or in writing, are not to be construed as an amendment or addition to the above warranty.

See http://www.omron.com/global/ or contact your Omron representative for published information.

LIMITATIONS OF LIABILITY

OMRON COMPANIES SHALL NOT BE LIABLE FOR SPECIAL, INDIRECT, INCIDENTAL, OR CONSEQUENTIAL DAMAGES, LOSS OF PROFITS OR PRODUCTION OR COMMERCIAL LOSS IN ANY WAY CONNECTED WITH THE PRODUCTS, WHETHER SUCH CLAIM IS BASED IN CONTRACT, WARRANTY, NEGLIGENCE OR STRICT LIABILITY.

Further, in no event shall liability of Omron Companies exceed the individual price of the Product on which liability is asserted.

Application Considerations

SUITABILITY FOR USE

Omron Companies shall not be responsible for conformity with any standards, codes or regulations which apply to the combination of the Product in the Buyer's application or use of the Product. At Buyer's request, Omron will provide applicable third party certification documents identifying ratings and limitations of use which apply to the Product. This information by itself is not sufficient for a complete determination of the suitability of the Product in combination with the end product, machine, system, or other application or use. Buyer shall be solely responsible for determining appropriateness of the particular Product with respect to Buyer's application, product or system. Buyer shall take application responsibility in all cases.

NEVER USE THE PRODUCT FOR AN APPLICATION INVOLVING SERIOUS RISK TO LIFE OR PROPERTY OR IN LARGE QUANTITIES WITHOUT ENSURING THAT THE SYSTEM AS A WHOLE HAS BEEN DESIGNED TO ADDRESS THE RISKS, AND THAT THE OMRON PRODUCT(S) IS PROPERLY RATED AND INSTALLED FOR THE INTENDED USE WITHIN THE OVERALL EQUIPMENT OR SYSTEM.

PROGRAMMABLE PRODUCTS

Omron Companies shall not be responsible for the user's programming of a programmable Product, or any consequence thereof.

Disclaimers

PERFORMANCE DATA

Data presented in Omron Company websites, catalogs and other materials is provided as a guide for the user in determining suitability and does not constitute a warranty. It may represent the result of Omron's test conditions, and the user must correlate it to actual application requirements. Actual performance is subject to the Omron's Warranty and Limitations of Liability.

CHANGE IN SPECIFICATIONS

Product specifications and accessories may be changed at any time based on improvements and other reasons. It is our practice to change part numbers when published ratings or features are changed, or when significant construction changes are made. However, some specifications of the Product may be changed without any notice. When in doubt, special part numbers may be assigned to fix or establish key specifications for your application. Please consult with your Omron's representative at any time to confirm actual specifications of purchased Product.

ERRORS AND OMISSIONS

Information presented by Omron Companies has been checked and is believed to be accurate; however, no responsibility is assumed for clerical, typographical or proofreading errors or omissions.

Note: Do not use this document to operate the Unit.

OMRON Corporation **Industrial Automation Company**

Kyoto, JAPAN

Contact: www.ia.omron.com

Regional Headquarters

OMRON EUROPE B.V.
Wegalaan 67-69, 2132 JD Hoofddorp
The Netherlands
Tel: (31)2356-81-300/Fax: (31)2356-81-388

OMRON ASIA PACIFIC PTE. LTD.
No. 438A Alexandra Road # 05-05/08 (Lobby 2),
Alexandra Technopark,
Singapore 119967
Tel: (65) 6835-3011/Fax: (65) 6835-2711

OMRON ELECTRONICS LLC
2895 Greenspoint Parkway, Suite 200 Hoffman Estates,
IL 60169 U.S.A.
Tel: (1) 847-843-7900/Fax: (1) 847-843-7787

OMRON ADEPT TECHNOLOGIES, INC.
4550 Norris Canyon Road, Suite 150, San Ramon, CA 94583 U.S.A.
Tel: (1) 925-245-3400/Fax: (1) 925-960-0590

OMRON (CHINA) CO., LTD.
Room 2211, Bank of China Tower, 200 Yin Cheng Zhong Road,
PuDong New Area, Shanghai, 200120, China
Tel: (86) 21-5037-2222/Fax: (86) 21-5037-2200

Authorized Distributor:

© OMRON Corporation 2016 All Rights Reserved.
In the interest of product improvement,
specifications are subject to change without notice.

CSM_6_1_1116
Cat. No. I822-E1-03 1116(0316)